## Samsung Built-in refrigerator & freezer combination EKG260 (right)

> Web link



**Model**
Samsung Built-in refrigerator & freezer combination EKG260 (right)

**Energy efficiency class**
D (New Label 03.21)

**Manufacturer ID**
BRB38G705DWWEF

**Article no.**
500.000.201.00

**Door hinge**
Right

**Construction**
Euro Norm 75 cm (sliding door system)

**VRG**
26.00

**Price CHF**
2'485.- excl. VAT

### Highlights

- XL refrigerator & freezer combination - 193,5 cm high, 69,0 cm wide
- 389 litre useable capacity
- 1 Fresh Box drawer / 4 glass shelves
- NoFrost+ technology in refrigerator and freezer - the end of de-icing
- Twin Cooling Plus - two separate cooling circuits, ideal air humidity
- Metal Cooling - to prevent cold air from escaping
- Precise Cooling - for maximum temperature accuracy
- Cool Select Plus - flexible refrigerator and freezer
- All Around Cooling - consistent temperature in the cooling chamber
- Power Cool / Power Freeze - particularly fast cooling / freezing
- Digital Inverter compressor - 10-year warranty
- 1 Optimal Fresh+ drawer

### Product description

**Samsung Built-in Refrigerator and Freezer EKG260**

Construction: **Euro Norm 75 cm (sliding door system)**
GTIN-Nr.: **8806095458144**

**Model classification**
Energy efficiency class (from A to G): **D**
Efficiency index: **80**
Energy consumption per year: **206 kWh**

**Design**
Colour/material: **White**
Door handles: **-**

**Display and operation**
Display: **Digital display**
Display and lighting: **LED, white**
Operation: **Touch LCD**

**Interconnection of household appliances**
Samsung Smart Home: **WiFi Smart Things**

**Performance properties**
Total useable capacity: **389 L**
Useable capacity refrigerator: **289 L**
Usable cold storage compartment capacity: **-**
Useful capacity cellar compartment: **-**
Useable capacity freezer: **100 L**
Frost-free fridge / freezer compartment (No Frost): **Yes / Yes**

**Power output**
Freezing capacity: **8 kg in 24 hours**
Storage time in case of outage: **12 hours**
Sound power level: **35 dB(A)**
Airborne sound emission class (A to D): **B**
Climate class: **SN-T**
Ambient temperature (min. > max.): **from +10°C to +43°C**
Type of light source | Energy efficiency class A to G: **LED | G**

**Construction and identification**
Stand-alone unit: **-**
Built-in unit: **Yes (Euro)**
Undermount unit::

## Samsung Built-in refrigerator & freezer combination EKG260 (right)

> Web link

**-**
Integral: **Yes**
Number of outside doors/pull-outs: **2/-**
Door hinge: **Right**

**Dimensions**
Height: **193,5 cm**
Width: **69,0 cm**
Depth: **55,0 cm**
Width with open door/pull-out: **74,9 cm**
Depth with open door/pull-out: **120,4 cm**
Dimensions of unit (H x W x D)**: 193,5 x 69,0 x 55,0 cm**

**Empty weight**
Empty weight of the unit: **92 kg**

**Fittings**

Operation Temperature setting: **Touch LCD**
Temperature display refrigerator: **Inside**
Temperature display freezer compartment: **Inside**

**Adjustable freezer temperature**
Independent of refrigerator temperature: **Yes**
Together with refrigerator temperature: **-**
Quick freeze switch with automatic reset: **Yes**
Warning signal / freezer compartment fault: **Visual / acoustic**
Door open: **Warning signal, acoustic**

**Refrigerator features**
Number of glass shelves (shelves): **4**
Number of door compartments (and/or containers): **5**
Number of vegetable drawers (containers): **2**
Wine compartment: **No / -**
Egg trays: **-**

**Freezer compartment features**
Number of compartments: **1**
Number of baskets, containers, drawers: **2**
Ice cube trays: **Yes**

**Further equipment features**
Water and ice cube dispenser in door: **-**
ClearView ice maker: **-**
Water filter: **-**
Fresh Zone compartments: **2**
Pull-out shelf: **1**
Water connection: **-**

**Cooling technology**
Digital inverter compressor: **Yes**
NoFrost+ technology: **Yes**
Power Cool / Power Freeze**: Yes / Yes**
All Around Cooling (multi-Flow): **Yes**
Metal Cooling: **Yes**
Smart Conversion 5-in-1: **-**
Cool Select Plus: **Yes**
Mono Cooling / Twin Cooling / Triple Cooling: **No / Yes / No**
Precise Cooling: **Yes**
Flex Zone: **-**
Refrigerant: **R-600a**

**Power supply**

**Electrical connection**
Supply voltage: **230 V / 50 Hz**
Connection values:

## Samsung Built-in refrigerator & freezer combination EKG260 (right)

> Web link

**125 W(220V) | 145 W(230-240V)**
Fuse protection: **2.5 A**
Length power connection: **2.5 m**
Power plug: **Schuko plug**

**Water connection**
Water connection: **-**

**Technical data**
Max. door front weight refrigerator/freezer: **23 kg / 15,5 kg**
Assembly technology: **Sliding door system**
Unit height: **1935 mm**
Unit width: **690 mm**
Unit depth: **550 mm**

**Packaging**
Weight, incl. packaging: **95 kg**
Packaging dimensions (H x W x D): **2024 x 750 x 629 mm**

**Suter Inox AG**
Schachenstrasse 20
CH-5116 Schinznach-Bad
T +41 56 463 64 00
suter@suter.ch
suter.ch

# Samsung EKG260 BRB38G705DWW_EF_DE

SUTER

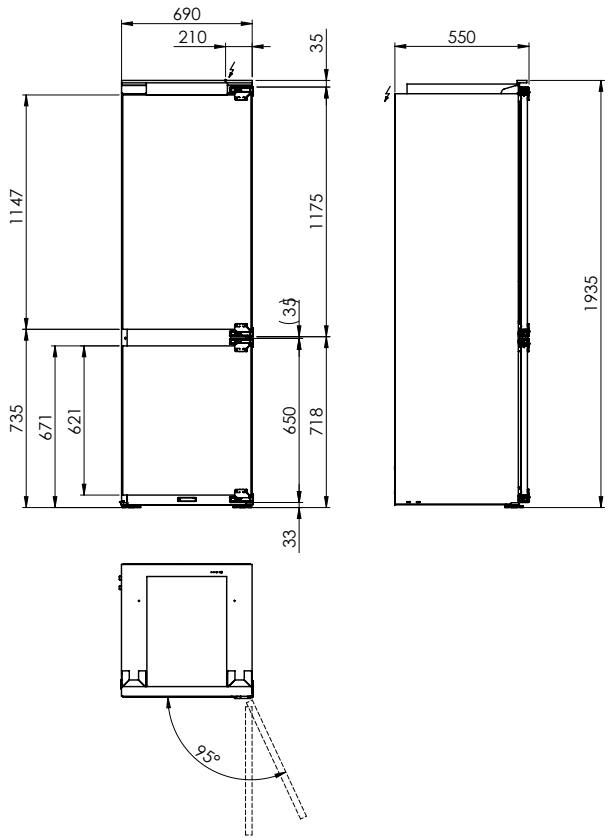


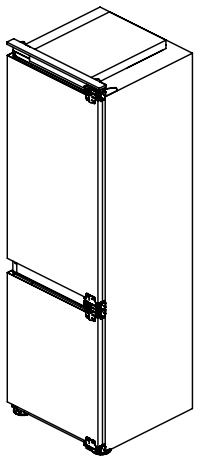

EKG260: 230 V / 10 A, T12, 2500 mm

Für dieses Dokument und den darin dargestellten Gegenstand behalten wir uns alle Rechte vor. Vervielfältigung, Bekanntgabe an Dritte oder Verwendung jeglicher Art, ohne unsere Zustimmung ist verboten. © Copyright 2005 Suter Inox AG. All rights reserved.

| Art.Nr.: | Zeichn.Nr.: 50.02.-21.0035.00.00 | Index: |
|---|---|---|

**Suter Inox AG**
Schachenstrasse 20
CH-5116 Schinznach-Bad
T +41 56 463 64 00
suter@suter.ch
suter.ch

# Samsung EKG260 BRB38G705DWW_EF_DE

SUTER

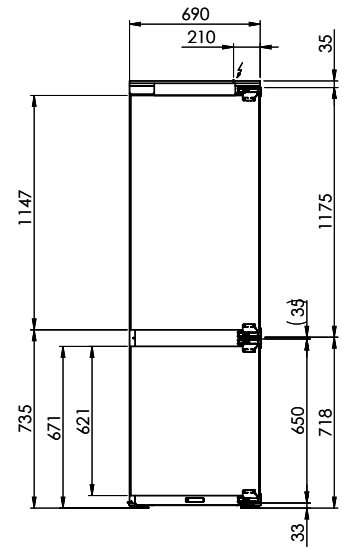


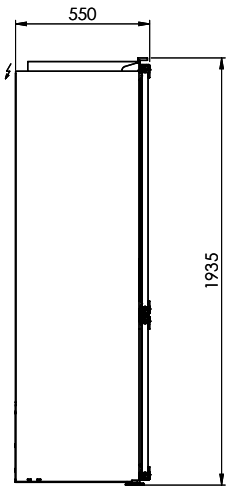


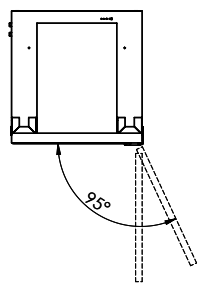


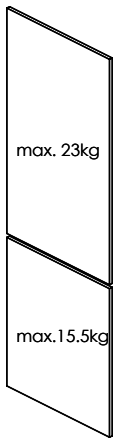


Mit Schlepptüren

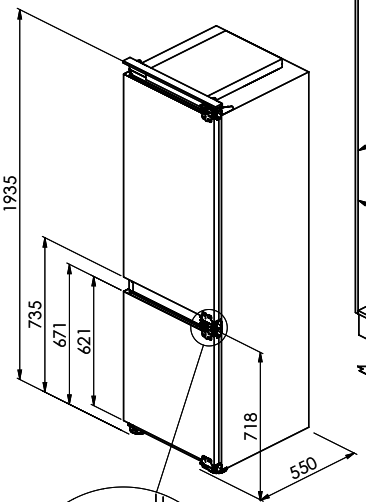


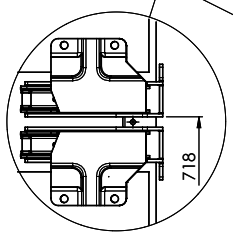


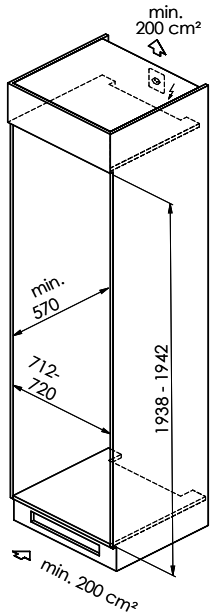


EKG260: 230 V / 10 A, T12, 2500 mm

Für diese Dokumenten und den darin dargestellten Gegenstand behalten wir uns alle Rechte vor. Vervielfältigung, Bekanntgabe an Dritte oder Verwendung seines Inhalts, ohne unsere Zustimmung ist verboten. © Copyright 2026 Suter Inox AG. All rights reserved.

| Art.Nr.: | Zeichn.Nr.: 50.02.-21.0035.00.00 | Index: 00+ | kop | 18.03.2026 |
|---|---|---|---|---|