Brooklyn BYK N 100S U

> Web link

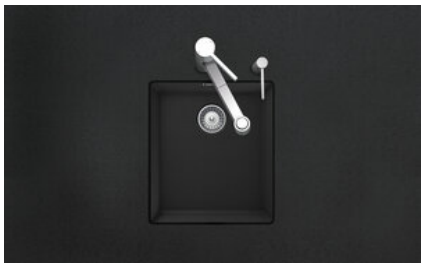

Fitting style
Undermount bowls

Model
BYK N 100S U

Material
Cristalite Plus

Article no.
10.104.322.00

Cabinet size
45 cm

Basket
3½" strainer basket

Color
Nero

Price CHF
813.- excl. VAT

Dimensions
350x400x200mm

Corner radius
9 mm

Basket pre-assembly
without valve assembly

Standard pull-up knob

Dispenser - mounting option

Prices (as of 26.11.26/excl. VAT)

Model	Material	Basket	Article no.	Price CHF	
Brooklyn BYK N 100S U	Cristalite Plus, Nero	3½" Space-saving	10.105.320.00	894.-	> Weblink
		3½" strainer basket	10.105.321.00	853.-	> Weblink
		3½" Space-saving	10.104.321.00	854.-	> Weblink
		3½" strainer basket	10.104.322.00	813.-	> Weblink

Product description

Material
Granite sinks Cristalite Plus: Schock sinks are composed of approx. 80 % quartz, the hardest component of granite. The quartz is bound by the highest quality of acrylic. The composition of acrylic and quartz makes the sinks extremely resistant against scratches and dirt and is responsible for their longevity.

Color identification Schock: Nero

Accessory

Optional accessories



> Weblink
40.000.912.00 / CHF 106.-
Colander, perforated



> Weblink
40.001.289.00 / CHF 106.-
Colander, unperforated



> Weblink
40.000.909.00 / CHF 151.-
Chopping board, made of glass, white



> Weblink
40.001.277.00 / CHF 151.-
Chopping board, made of plastic

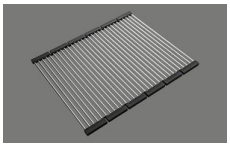

> Weblink
40.001.138.00 / CHF 125.-
Inox Pad

Compatible Articles



> Weblink
40.001.314.00 / CHF 155.-
Dispenser Nano



> Weblink
40.001.024.00 / CHF 427.-
Müllex Boxx 55/60-R Bio

Suter Inox AG
Schachenstrasse 20
CH-5116 Schinznach-Bad
T +41 56 463 64 00
suter@suter.ch
suter.ch

Brooklyn BYK N 100S U

Masse / Ausschnittkontur
Dimensions / contour de découpe
Dimensioni / contorno dell'apertura

SUTER

Bohrung für Zug- und Druckknöpfe Ø14
Bohrung für Drehknopf Ø25
Trou pour boutons et Poussoirs de commande Ø14
Trou pour bouton rotatif Ø25
Foro per Pomelli tiranti e Pomelli pulsanti Ø14
Foro per Pomolo girevoli Ø25

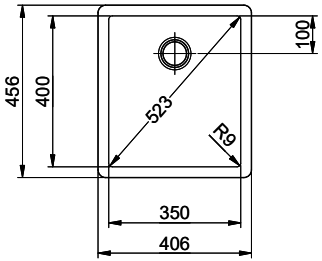

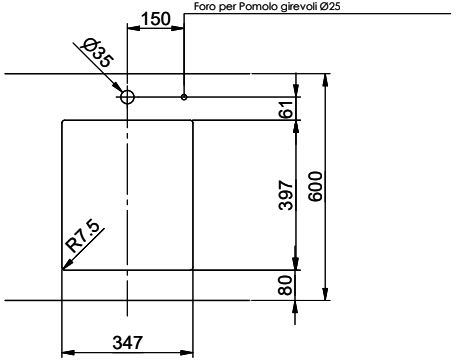

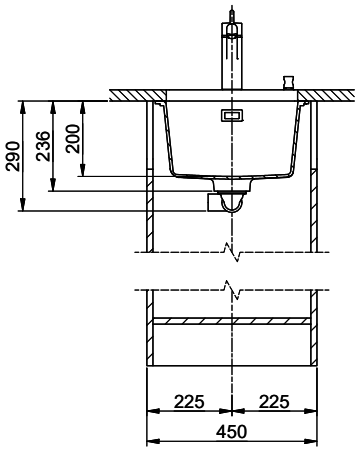

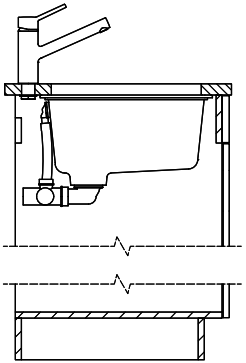

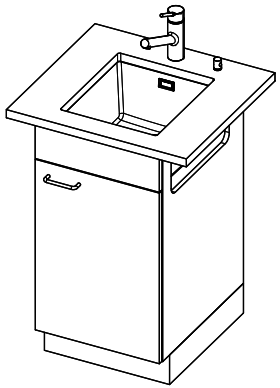

Für dieses Dokument und den darin dargestellten Gegenstand behalten wir uns alle Rechte vor. Vervielfältigung, Bekanntgabe an Dritte oder Verwendung seines Inhalts, ohne unsere Zustimmung ist verboten. © Copyright 2005 Suter Inox AG All rights reserved.

Zeichn.Nr.:	Dok.Nr.: 00.28-23.0131.00.00	Index:	fes	14.10.2021