Brooklyn BYK N 100U

> Web link



Fitting style
Undermount bowls

Model
BYK N 100U

Material
Cristalite Plus

Article no.
10.104.319.00

Cabinet size
50 cm

Basket
3½" strainer basket

Color
Nero

Price CHF
850.- excl. VAT

Dimensions
400x400x200mm

Corner radius
9 mm

Basket pre-assembly
without valve assembly

Standard pull-up knob

Dispenser - mounting option

Prices (as of 25.11.26/excl. VAT)

Model	Material	Basket	Article no.	Price CHF	
Brooklyn BYK N 100U	Cristalite Plus, Nero	3½" Space-saving	10.105.322.00	931.-	> Weblink
		3½" strainer basket	10.105.323.00	890.-	> Weblink
		3½" Space-saving	10.103.292.00	891.-	> Weblink
		3½" strainer basket	10.104.319.00	850.-	> Weblink

Product description

Material
Granite sinks Cristalite Plus: Schock sinks are composed of approx. 80 % quartz, the hardest component of granite. The quartz is bound by the highest quality of acrylic. The composition of acrylic and quartz makes the sinks extremely resistant against scratches and dirt and is responsible for their longevity.

Accessory

Optional accessories



> Weblink
40.000.912.00 / CHF 106.-
Colander, perforated



> Weblink
40.001.289.00 / CHF 106.-
Colander, unperforated



> Weblink
40.000.909.00 / CHF 151.-
Chopping board, made of glass, white



> Weblink
40.001.277.00 / CHF 151.-
Chopping board, made of plastic

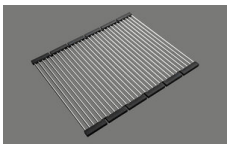

> Weblink
40.001.138.00 / CHF 125.-
Inox Pad

Spares

You can find the compatible ragne of spares here > Weblink

Suter Inox AG
Schachenstrasse 20
CH-5116 Schinznach-Bad
T +41 58 263 64 00
suter@suter.ch
suter.ch

Brooklyn BYK N 100U

Masse / Ausschnittkontur
Dimensions / contour de découpe
Dimensioni / contorno dell'apertura

SUTER

Bohrung für Zug- und Druckknöpfe Ø14
Bohrung für Drehknopf Ø25
Trou pour boutons et Poussoirs de commande Ø14
Trou pour bouton rotatif Ø25
Foro per Pomelli tiranti e Pomelli pulsanti Ø14
Foro per Pomolo girevoli Ø25

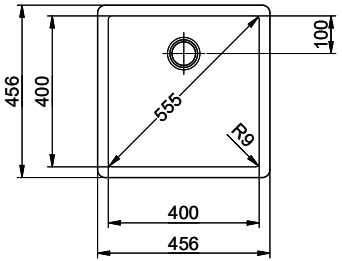

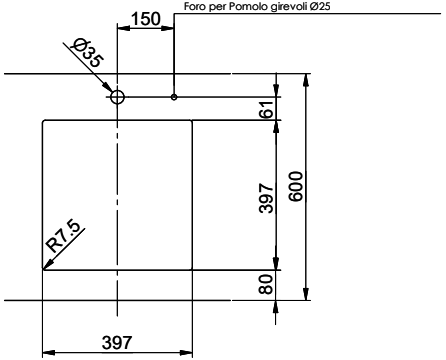

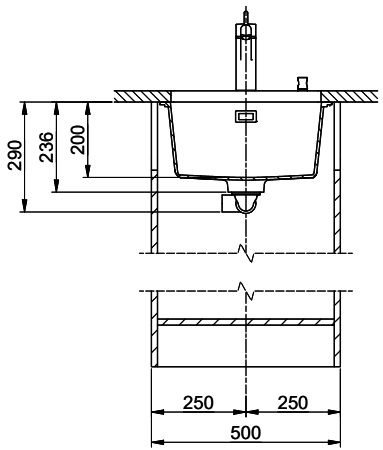

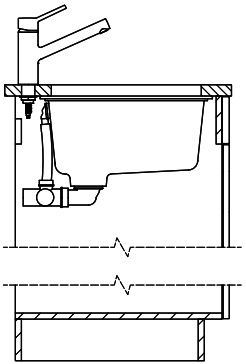

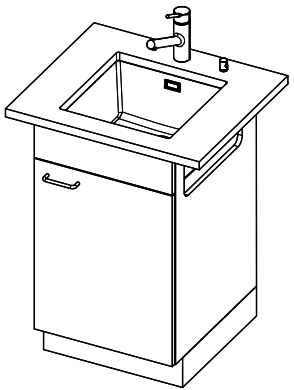

Zeichn.Nr.:	Dok.Nr.: 00.28-23.0127.00.00	Index:	fes	14.10.2021