Daneo DAN CP 50U/2

> Web link

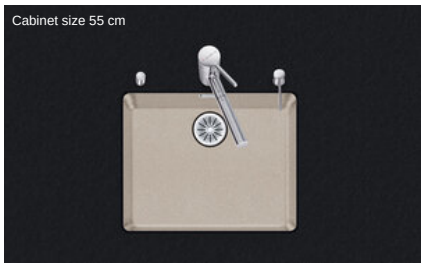

Fitting style
Undermount bowls

Model
DAN CP 50U/2

Material
Cristalite Plus

Article no.
10.104.783.00

Cabinet size
55 cm

Basket
3½" Space-saving

Color
Everest

Price CHF
1'151.- excl. VAT

Dimensions
500x400x165mm

Corner radius
22 mm

Overflow and drain technology



Sieve - type S, for granite sinks



Swivelling overflow cap for granite sinks

Basket pre-assembly
Assembly of the valve at the factory

Dispenser - mounting option
Free choice of positioning

Recommendation for use with boiling water taps
No (for this application, we recommend Linero sinks in Cristadur)

Overflow and drain technology
Standard pull-up knob



Advant

Prices (as of 23.11.26/excl. VAT)

Model	Material	Basket	Article no.	Price CHF	
Daneo DAN CP 50U/2 - Everest	Cristalite Plus, Everest	3½" Tipo	10.104.784.00	1'110.-	> Weblink
		3½" Space-saving	10.104.783.00	1'151.-	> Weblink
		3½" TouchFlow	10.104.782.00	1'349.-	> Weblink

Product description

Material
Granite sinks Cristalite Plus: Schock sinks are composed of approx. 80 % quartz, the hardest component of granite. The quartz is bound by the highest quality of acrylic. The composition of acrylic and quartz makes the sinks extremely resistant against scratches and dirt and is responsible for their longevity.

Accessory

You can find the complete range of accessories here > Weblink

Optional accessories



> Weblink
40.000.912.00 / CHF 106.-
Colander, perforated



> Weblink
40.001.289.00 / CHF 106.-
Colander, unperforated



> Weblink
40.000.909.00 / CHF 151.-
Chopping board, made of glass, white



> Weblink
40.001.277.00 / CHF 151.-
Chopping board, made of plastic

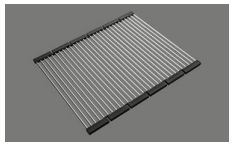

> Weblink
40.001.138.00 / CHF 125.-
Inox Pad



> Weblink
40.001.509.00 / CHF 29.-
Easy Care cleaning kit for granite sinks

Spares

You can find the compatible ragne of spares here > Weblink

Suter Inox AG
Schachenstrasse 20
CH-5116 Schinznach-Bad
T +41 58 263 64 00
suter@suter.ch
suter.ch

Daneo DAN CP 50U/2

Masse / Ausschnittkontur
Dimensions / contour de découpe
Dimensioni / contorno dell apertura

SUTER

Bohrung für Zug- und Druckknöpfe ø14
Bohrung für Drehknopf ø25

Trou pour boutons et Poussoirs de commande ø14
Trou pour bouton rotatif ø25

Foro per Pomelli tiranti e Pomelli pulsanti ø14
Foro per Pomolo girevoli ø25

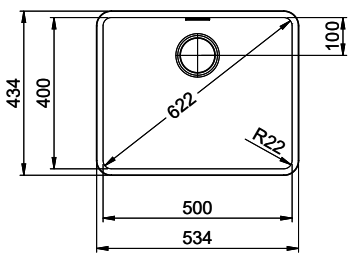

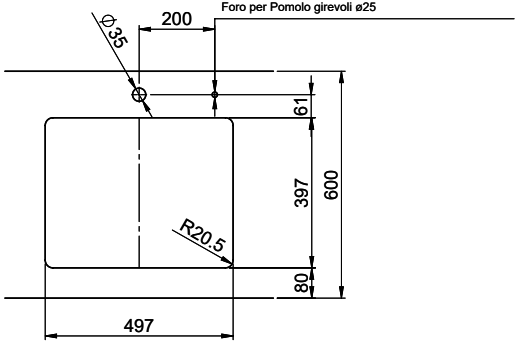

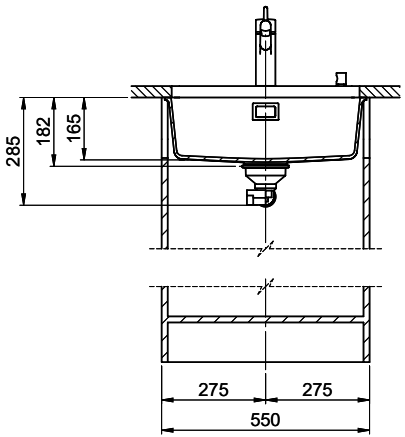

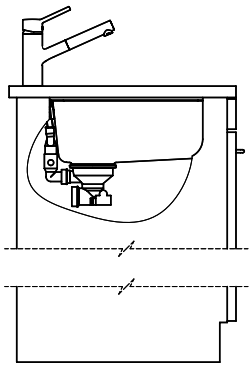

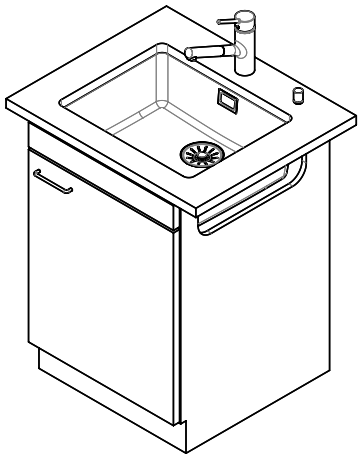

Für diesen Dokumen t und den darin dargestellten Gegenstand behalten wir uns alle Rechte vor. Vervielfältigung, Bekanntgabe an Dritte oder Verwendung seines Inhalts ohne unsere Zustimmung ist verboten. © Copyright 2005 Suter Inox AG. All rights reserved.

Zeichn. Nr.:	Dok. Nr.: 00.01-22.0135.21.21	Index: 01	daf	03.11.2022