EVOline One T23 built-in socket outlet black

> Web link



Dimensions

Article no.
40.002.165.00

Price CHF
114.- excl. VAT

Product description

Technical data
The built-in socket EVOline One is a compact power access point that can be harmoniously integrated into any design concept. And this on a very space-saving and discreet way. Whether in completely black design or with stainless steel inlay: Both versions can be easily exchanged thanks to the easily replaceable module inserts of the respective adjust requirement. The new, patented mounting system holds from a front thickness of 9 mm. The installation depth is 50 mm.

Supply voltage
230 V
Rated current maximum
16 A
Dimensions
Ø 59 mm
Dimensions Thickness
4mm
Installation depth
50mm
Orifice Bore
Ø 54 mm
Network connection
Fixed mains cable 2.5 m, without mains plug (16 A, type 23 or direct connection)
Mounting
From the front

Scope of delivery
- Socket, incl. connection cable 2.5 m
- Ring without cover
- Ring with cover (360° rotatable)

Suter Inox AG
Schachenstrasse 20
CH-5116 Schinznach-Bad
Tel. +41 56 463 63 33
Fax +41 56 463 63 30
E-Mail: suter@suter.ch

EVOline One

SUTER inox technik

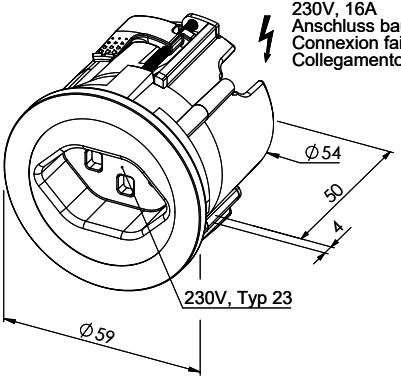

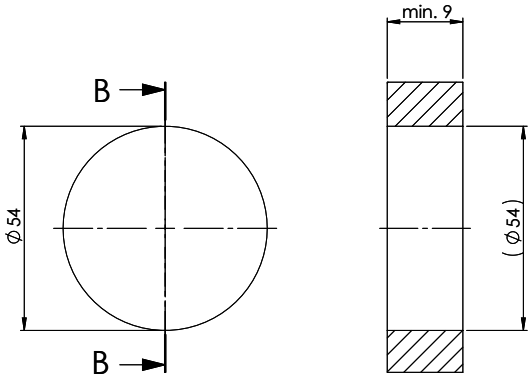

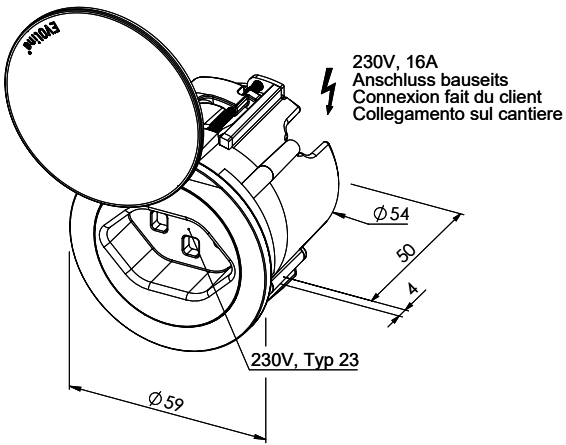

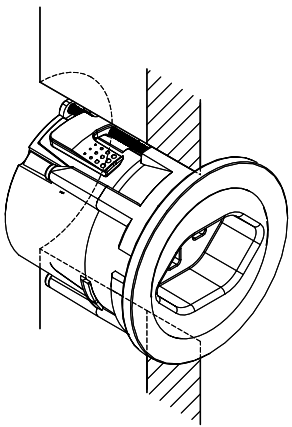

Für dieses Dokument und den darin dargestellten Gegenstand behalten wir uns alle Rechte vor. Vervielfältigung, Bekanntgabe an Dritte oder Verwendung seines Inhalts ohne unsere Zustimmung ist verboten. © Copyright 2003 Suter Inox AG. All rights reserved.

Art.Nr.: 40.002.165 / 40.002.166	Zeichn.Nr.: 13.00 - 20.0028.00.00	Index:	fes	09.01.2019