EVOline Qi Charger

> Web link



Dimensions

Article no.
40.002.437.00

Price CHF
293.- excl. VAT

Product description

EvoLine Qi Charger: Qi charging station for integration into a worktop, plastic, black
With the EVOline Qi Charger, all Qi-compatible devices can be charged on the same charging station without cables or accessories. It can be installed either under the worktop - so that the charging station is invisible - or attached to a standard opening with a diameter of 80 mm. The device to be charged is simply positioned in the appropriate place - pure minimalism. Charging is done inductively, i.e. the charging coil is only activated when it is connected to the device to be charged.

Scope of delivery
Qi charging coil according to WPC Spec. 1.2.2 "Qi".
USB power adapter with Euro plug, 1 m USB cable
Installation and operating instructions

Technical data
Operating voltage 9 V
Power consumption (operation) max. 10 W
Power consumption (standby) 0.2 W
Operating temperature 17° C - 25° C
Maximum operating temperature 0° C - 40° C
Installation depth (incl. plug) 28 mm
Installation / mounting: Invisible under the worktop or surface mounted

Concealed installation under the worktop: Surfaces must not be electrically conductive (e.g. metal, stainless steel). Recommendation for natural stone: Test before installation/milling, as it may contain traces of iron ore. The remaining thickness of the worktop should be a maximum of 3 mm at the cut-out (see drawing).

If necessary, remove the cover, shell, flap case or case of your smartphone so that wireless charging can work.

Suter Inox AG
Schachenstrasse 20
CH-5116 Schinznach-Bad
Tel. +41 56 463 63 33
Fax +41 56 463 63 30
E-Mail: suter@suter.ch

QI Charger

SUTER inox technik

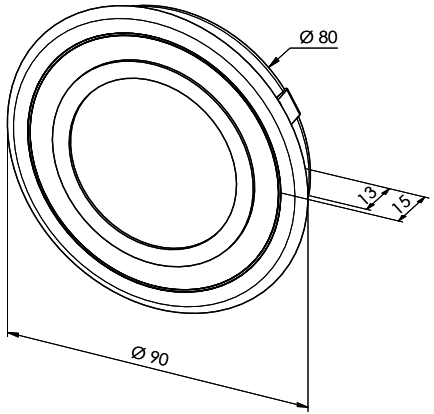

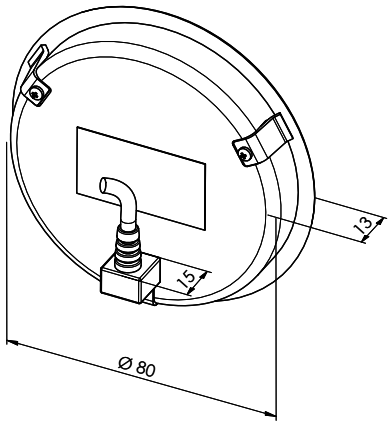



230V / 2.5A, T12, 0.35A

Ausschnit für sichtbaren Einbau
Découpe pour installation visible
Ritaglio per installazione a vista

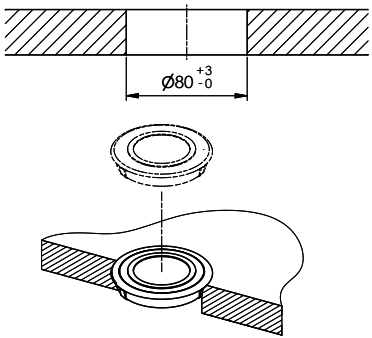

Ausschnit für unsichtbaren Einbau
Découpe pour installation invisible
Ritaglio per installazione invisibile

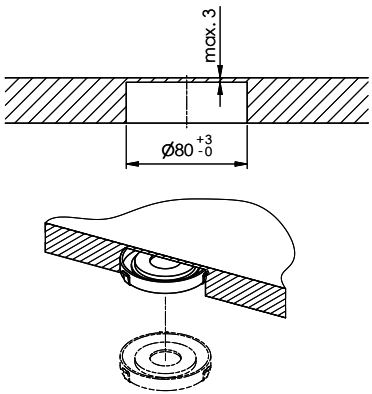

Für dieses Dokumument und den darin dargestellten Gegenstand behalten wir uns alle Rechte vor. Vervielfältigung, Bekanntgabe an Dritte oder Verwendung seines Inhalts, ohne unsere Zustimmung ist verboten. © Copyright 2005 Suter Inox AG. All rights reserved.

Art.Nr.:	Zeichn.Nr.:	Index:	fes	14.10.2021