Gessi Officine V

> Web link



Serie
Gessi Officine V

Version
Side Lever U

Manufacturer ID
60203.299

Article no.
40.002.126.00

Model
Pull out spout

Surface
Powder coating black matt

Price CHF
679.- excl. VAT

Product description

Label Swiss Energy

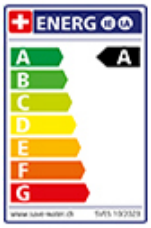

Pivoting Range
360°

Flow Rate
7.00 (l / min (3bar))

Water jet
Normal jet

Type of spout
Spout with nylon hose

Lever position
Right

Water connection
Flexible connecting hose

Extra
Ceramic cartridge

Compatible Articles



> Weblink
40.002.155.00 / CHF 361.-
Dispenser Nano

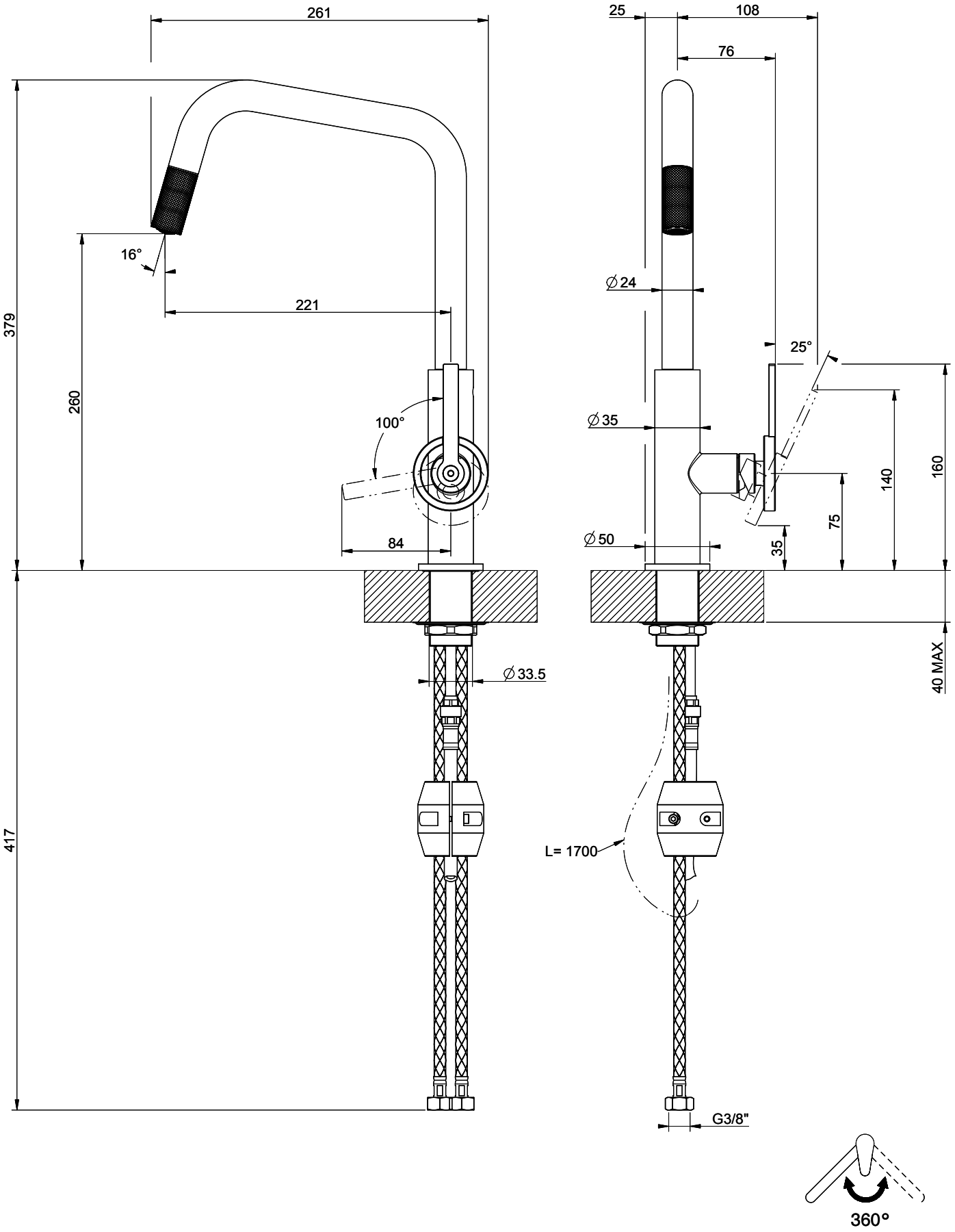

OFFICINE GESSI 60203

MISCELATORE LAVELLO MONOCOMANDO DOCCINO ESTRAIBILE DA PIANO

Formato *A4*

Dis.: GPF6020300000G000

Gessi S.p.A.Parco Gessi,13037 Serravalle Sesia (Vercelli) Italy Tel.0039 0163 454111 Fax.0039 0163 453150 www.gessi.com e-mail:gessi@gessi.it

This drawing by its legislation cannot be disclosed or reproduced without a written authorization released by GESSI S.p.A. - 2018 Copyright© GESSI S.p.A.