## Laufen Eleo

> Web link



**Serie**
Laufen Eleo

**Article no.**
40.003.028.00

**Model**
Pull-out spray

**Surface**
Chrome

**Price CHF**
274.- excl. VAT

### Product description

**Label Swiss Energy**

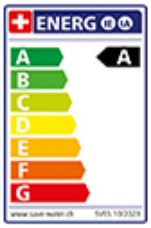


**Pivoting Range**
90°

**Flow Rate**
6.90 (l / min (3bar))

**Water jet**
Normal jet

**Type of spout**
Spout with nylon hose

**Water connection**
Flexible connecting hose

**Extra**
Ceramic cartridge

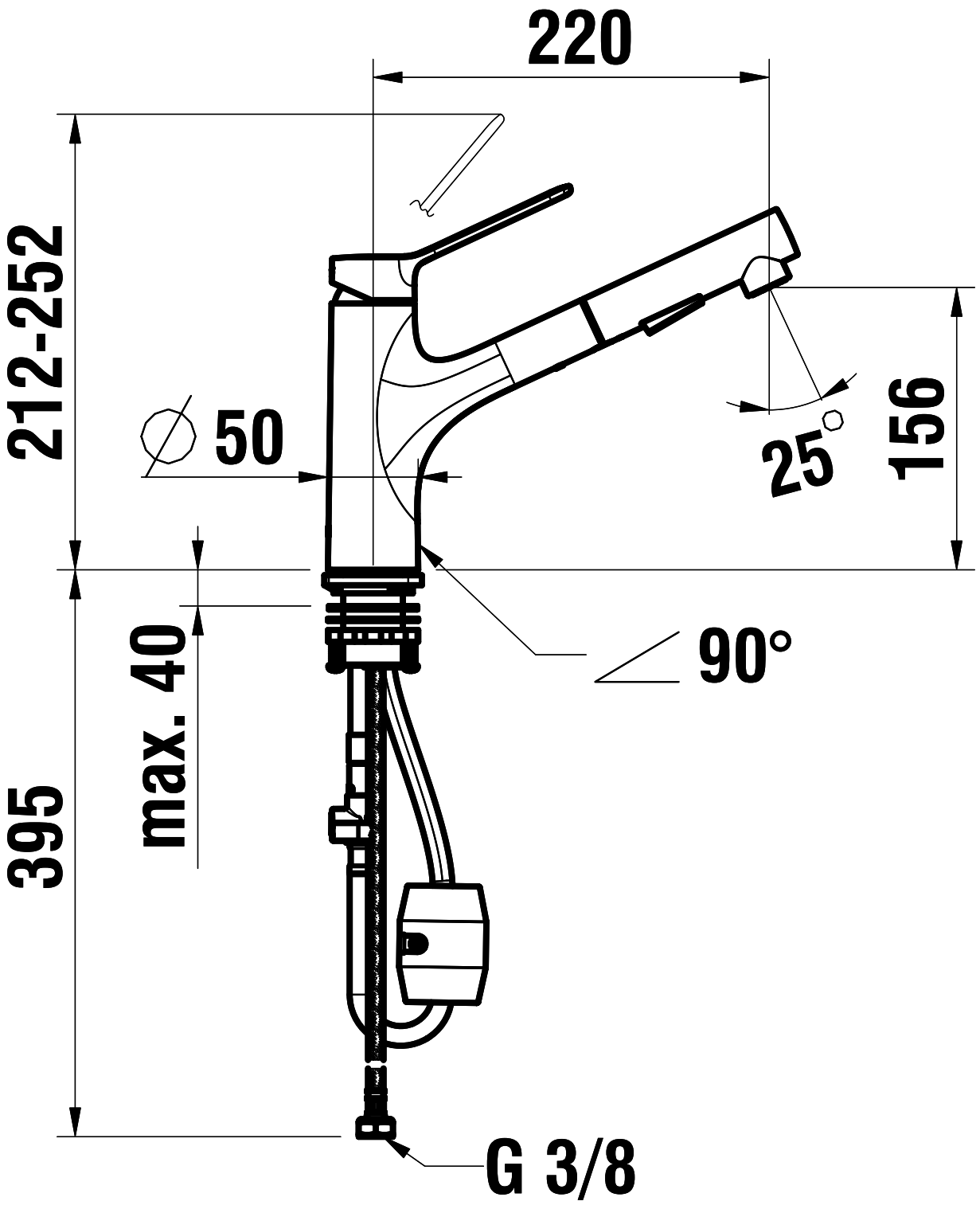
220
212-252
∅ 50
25°
156
max. 40
90°
395
G 3/8