Laufen Eleo

> Web link



Serie
Laufen Eleo

Article no.
40.003.028.00

Model
Pull-out spray

Surface
Chrome

Price CHF
274.- excl. VAT

Product description

Label Swiss Energy

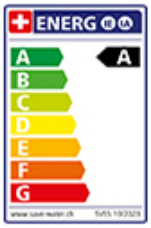

Pivoting Range
90°

Flow Rate
6.90 (l / min (3bar))

Water jet
Normal jet

Type of spout
Spout with nylon hose

Water connection
Flexible connecting hose

Extra
Ceramic cartridge

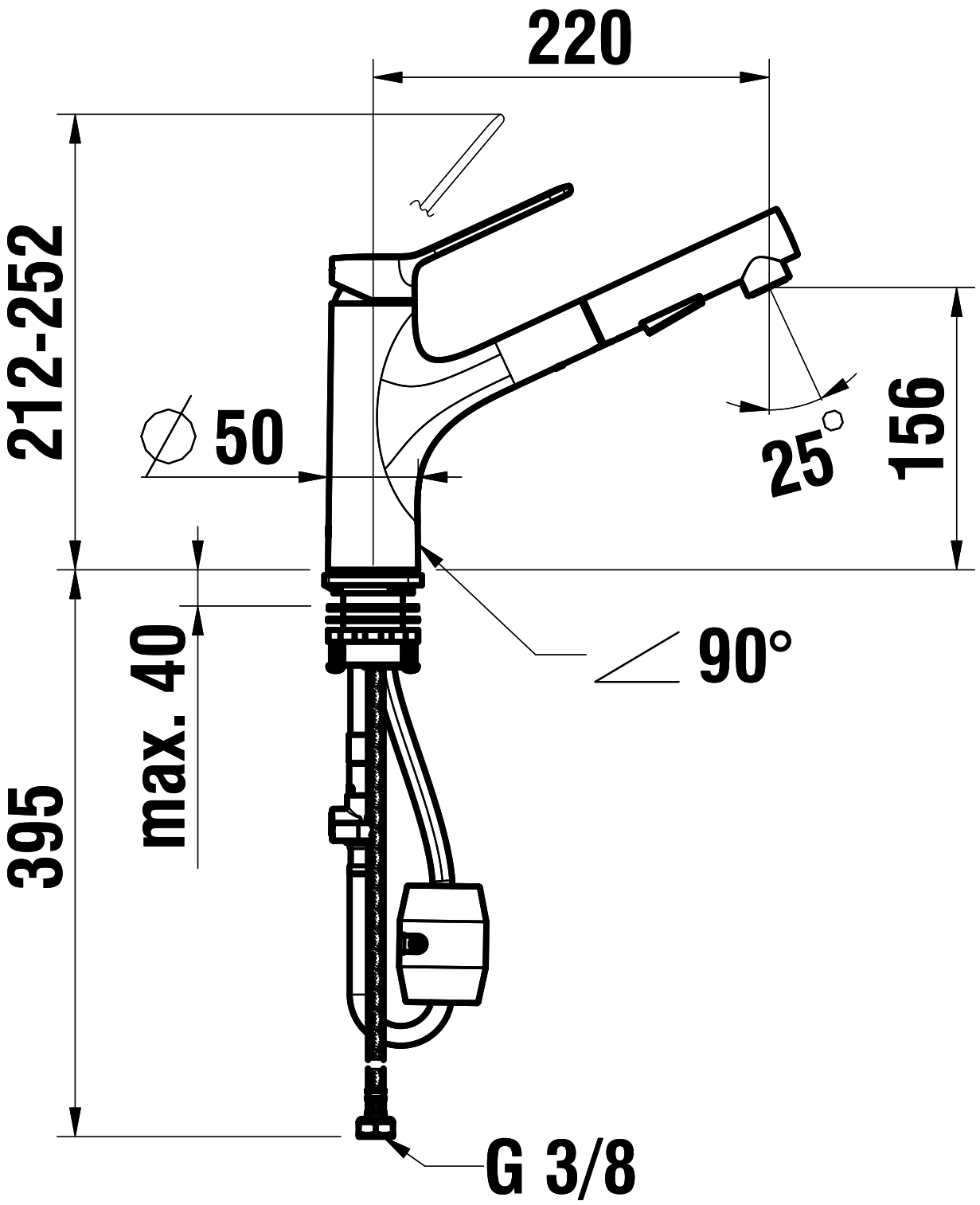
220
212-252
∅ 50
25°
156
max. 40
90°
395
G 3/8