Laufen Eleo

> Web link



Serie
Laufen Eleo

Article no.
40.003.031.00

Model
Swivel spout

Surface
Powder coating black matt

Price CHF
264.- excl. VAT

Product description

Label Swiss Energy

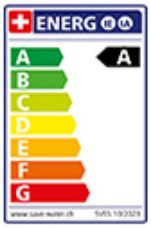

Pivoting Range
90°

Flow Rate
6.90 (l / min (3bar))

Water jet
Normal jet

Water connection
Flexible connecting hose

Extra
Ceramic cartridge

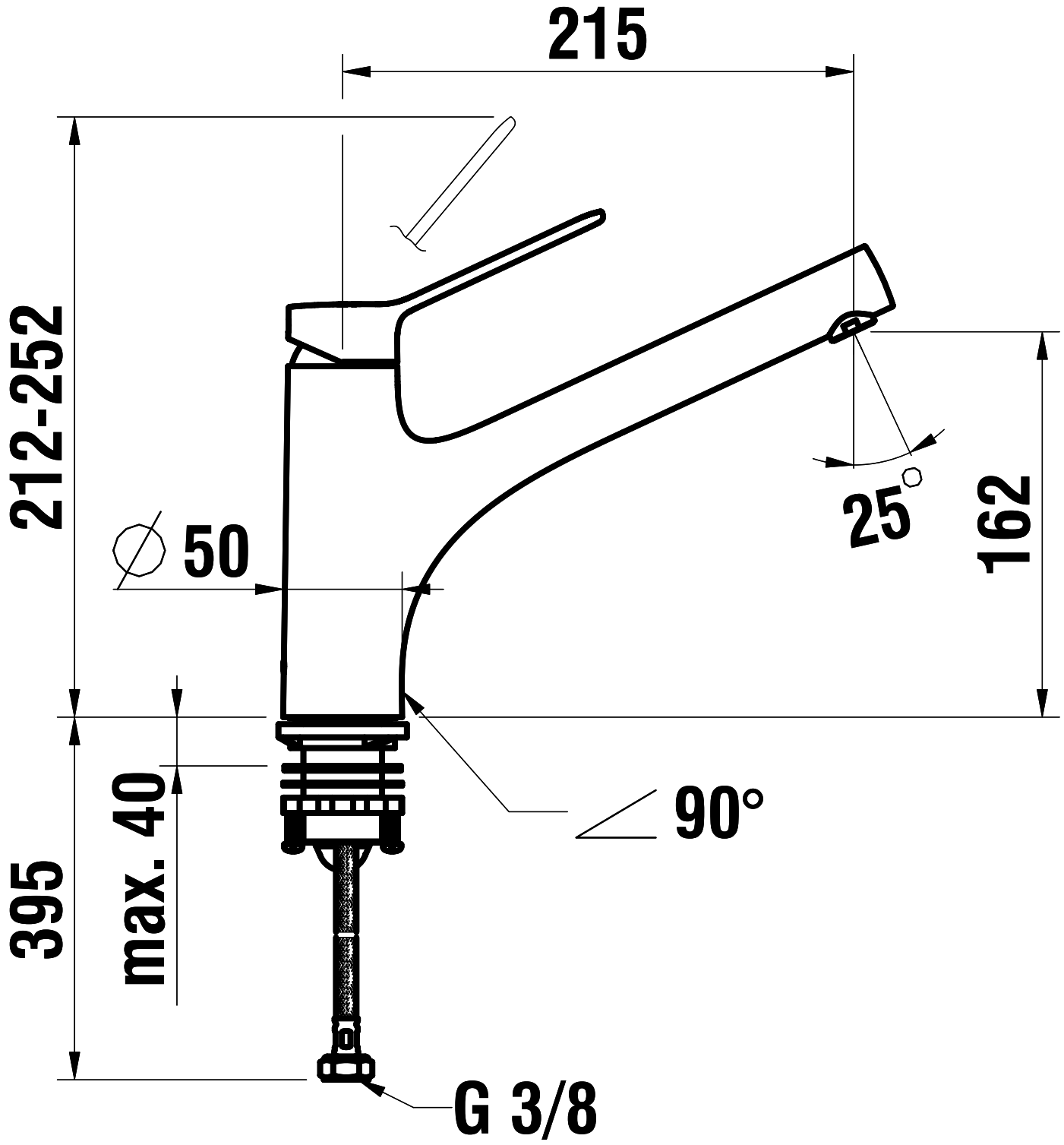
215
212-252
∅ 50
25°
162
max. 40
395
90°
G 3/8