Laufen Kiano

> Web link



Serie
Laufen Kiano

Version
Top Lever

Article no.
40.003.032.00

Model
Pull-out spray

Surface
Stainless steel, solid

Price CHF
404.- excl. VAT

Product description

Label Swiss Energy

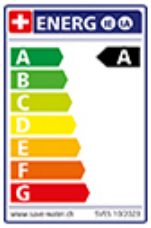

Pivoting Range
120°

Flow Rate
7.00 (l / min (3bar))

Water jet
Normal jet

Type of spout
Spout with nylon hose

Water connection
Flexible connecting hose

Extra
Ceramic cartridge

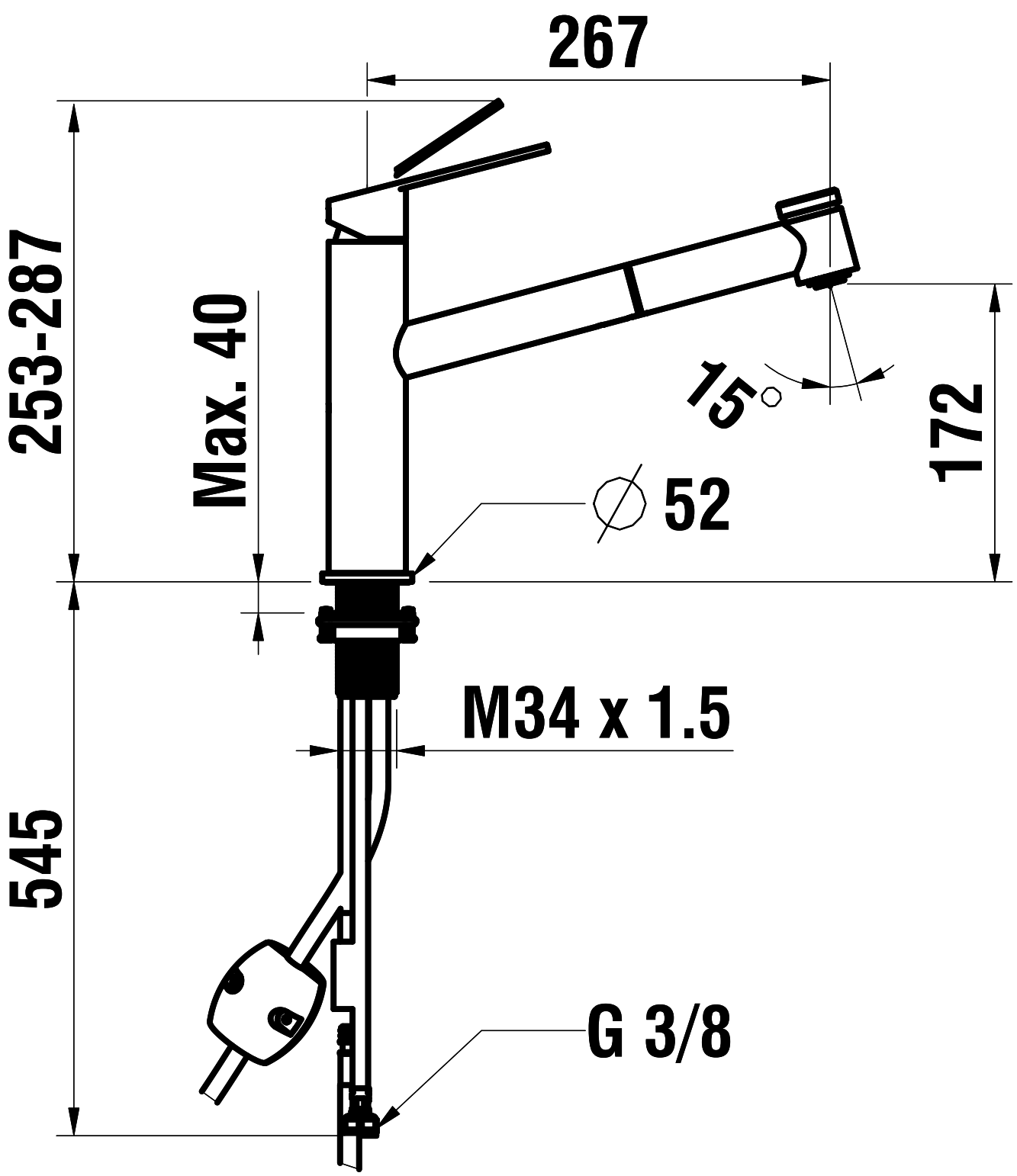
267
253-287
Max. 40
15°
172
⌀ 52
M34 x 1.5
545
G 3/8