## Laufen Kiano

> Web link



**Serie**
Laufen Kiano

**Version**
Top Lever

**Article no.**
40.003.032.00

**Model**
Pull-out spray

**Surface**
Stainless steel, solid

**Price CHF**
404.- excl. VAT

### Product description

**Label Swiss Energy**

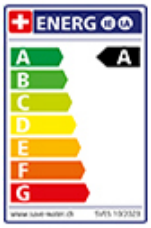


**Pivoting Range**
120°

**Flow Rate**
7.00 (l / min (3bar))

**Water jet**
Normal jet

**Type of spout**
Spout with nylon hose

**Water connection**
Flexible connecting hose

**Extra**
Ceramic cartridge

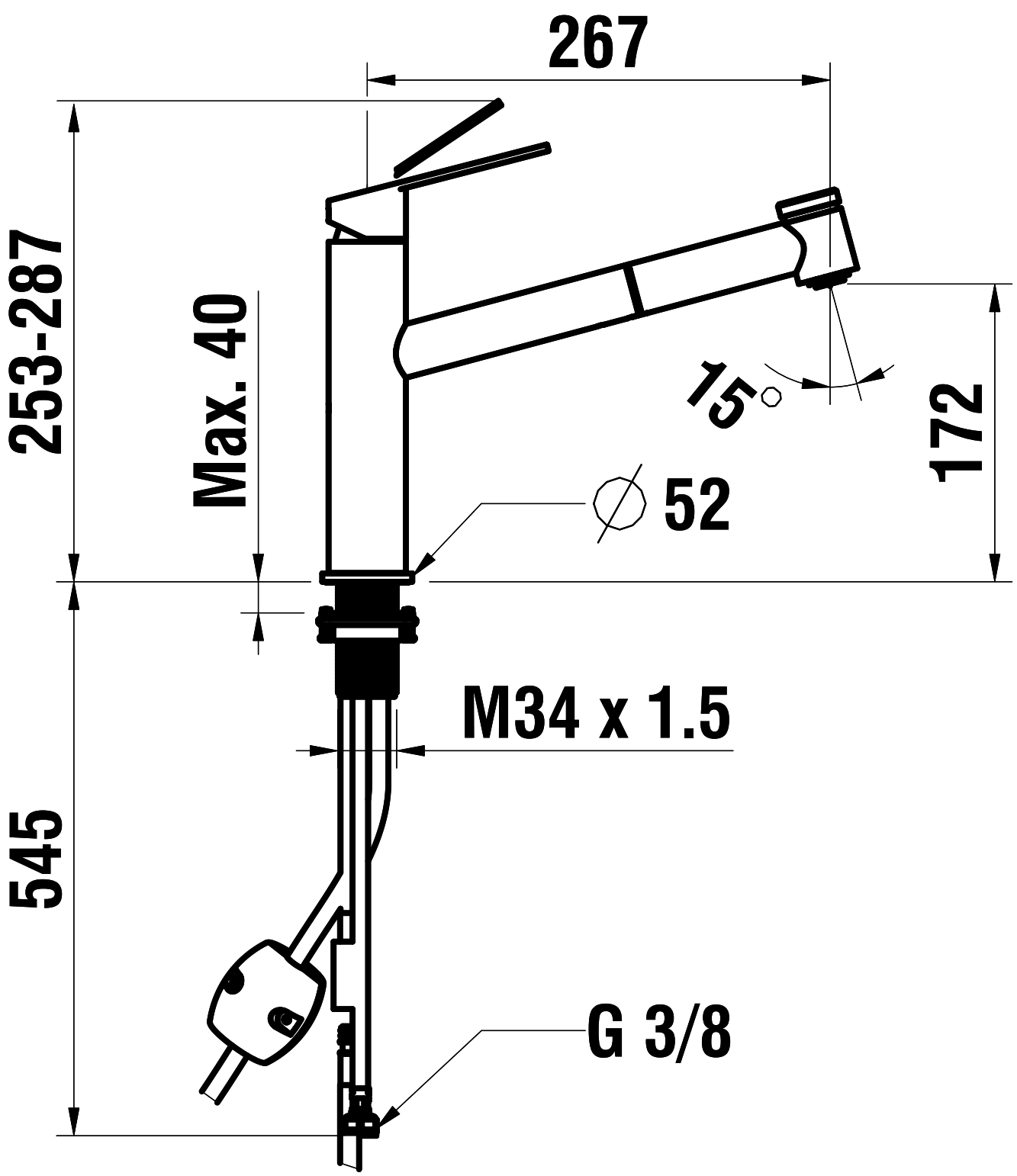
267
253-287
Max. 40
15°
172
⌀ 52
M34 x 1.5
545
G 3/8