Laufen Kiano

> Web link



Serie
Laufen Kiano

Version
Top Lever

Article no.
40.003.033.00

Model
Pull out spout

Surface
Stainless steel, solid

Price CHF
363.- excl. VAT

Product description

Label Swiss Energy

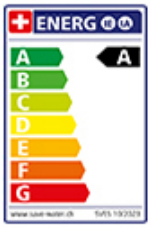

Pivoting Range
120°

Flow Rate
7.90 (l / min (3bar))

Water jet
Normal jet

Type of spout
Spout with nylon hose

Water connection
Flexible connecting hose

Extra
Ceramic cartridge

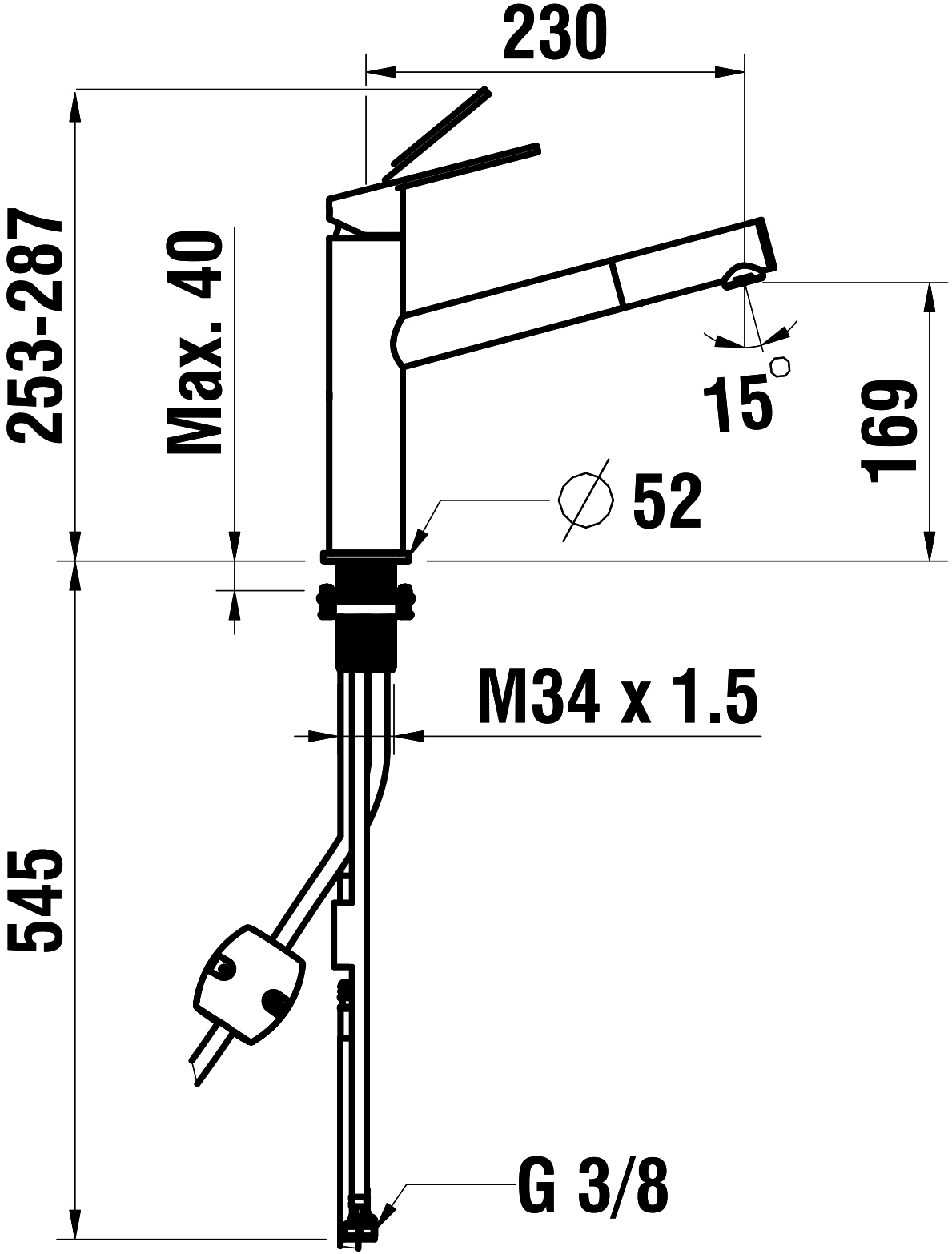
230
253-287
Max. 40
15°
169
⌀ 52
M34 x 1.5
545
G 3/8