Laufen Kiano

> Web link



Serie
Laufen Kiano

Version
Top Lever

Article no.
40.003.034.00

Model
Swivel spout

Surface
Stainless steel, solid

Price CHF
302.- excl. VAT

Product description

Label Swiss Energy

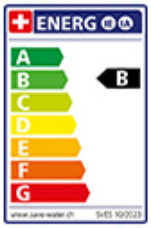

Pivoting Range
150°

Flow Rate
11.60 (l / min (3bar))

Water jet
Normal jet

Water connection
Flexible connecting hose

Extra
Ceramic cartridge

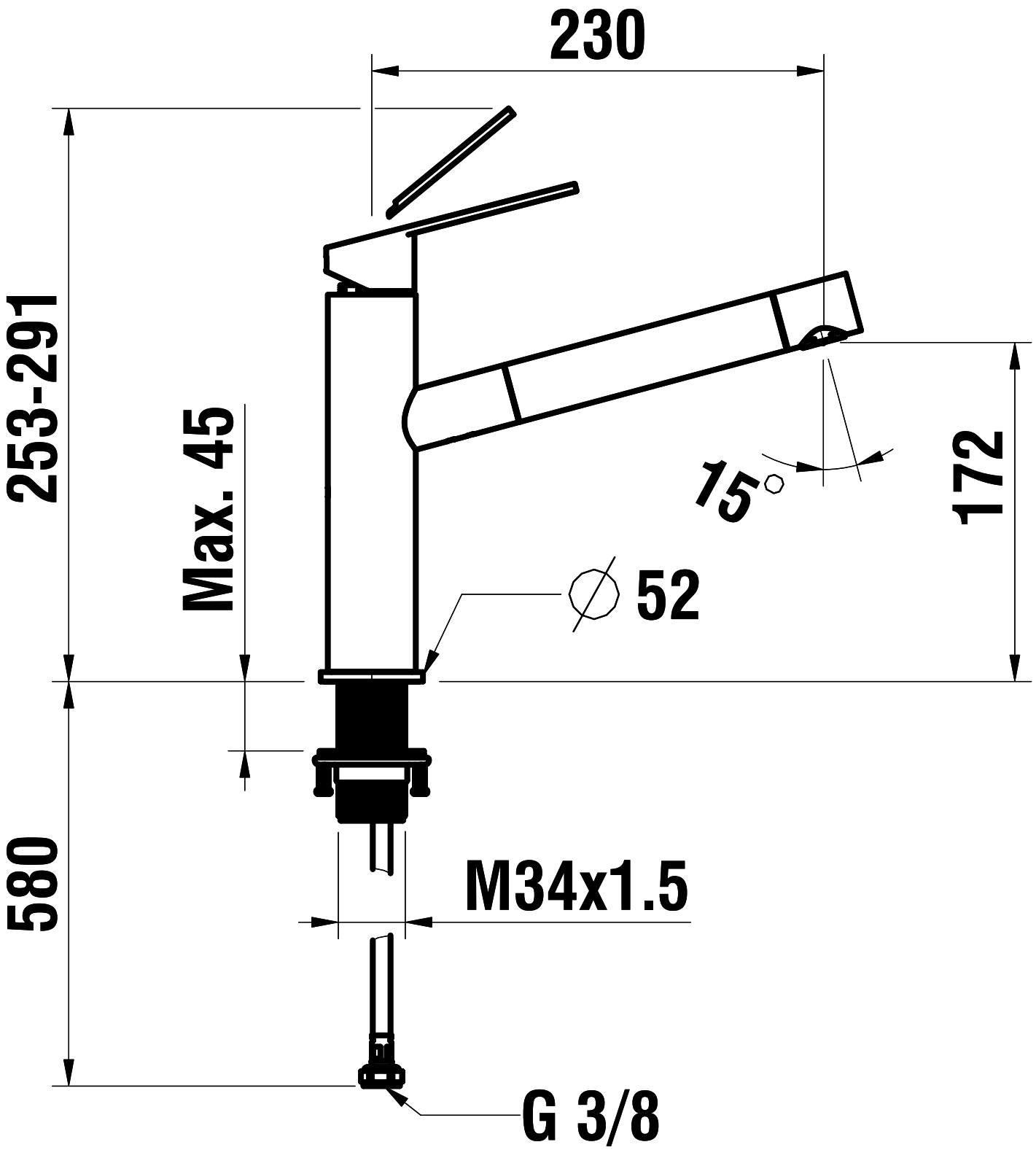
230
253-291
Max. 45
15°
172
⌀ 52
580
M34x1.5
G 3/8