Laufen Kiano

> Web link



Serie
Laufen Kiano

Version
Side Lever C

Article no.
40.003.036.00

Model
Pull out spout

Surface
PVD coating, Inox Black

Price CHF
531.- excl. VAT

Product description

Label Swiss Energy

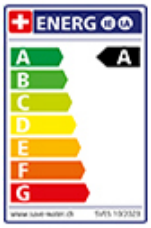

Pivoting Range
180°

Flow Rate
7.70 (l / min (3bar))

Water jet
Normal jet

Type of spout
Spout with nylon hose

Lever position
Right

Water connection
Flexible connecting hose

Extra
Ceramic cartridge

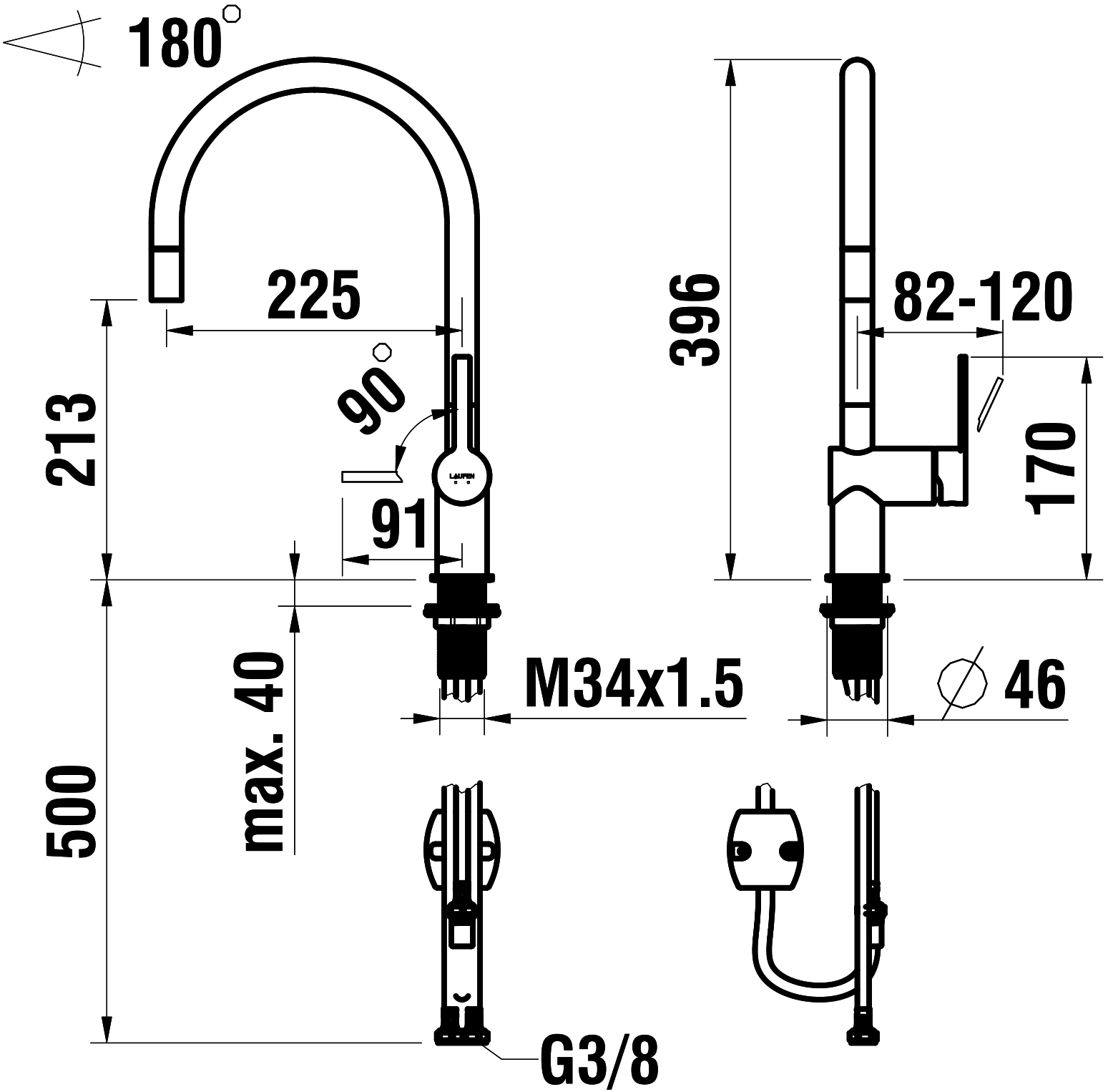
180°
225
213
90°
91
396
82-120
170
max. 40
500
M34x1.5
∅ 46
G3/8