## Laufen Kiano

> Web link



**Serie**
Laufen Kiano

**Version**
Side Lever C

**Article no.**
40.003.037.00

**Model**
Swivel spout

**Surface**
Stainless steel, solid

**Price CHF**
343.- excl. VAT

### Product description

**Label Swiss Energy**

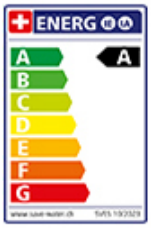


**Pivoting Range**
360°

**Flow Rate**
7.70 (l / min (3bar))

**Water jet**
Normal jet

**Lever position**
Right

**Water connection**
Flexible connecting hose

**Extra**
Ceramic cartridge

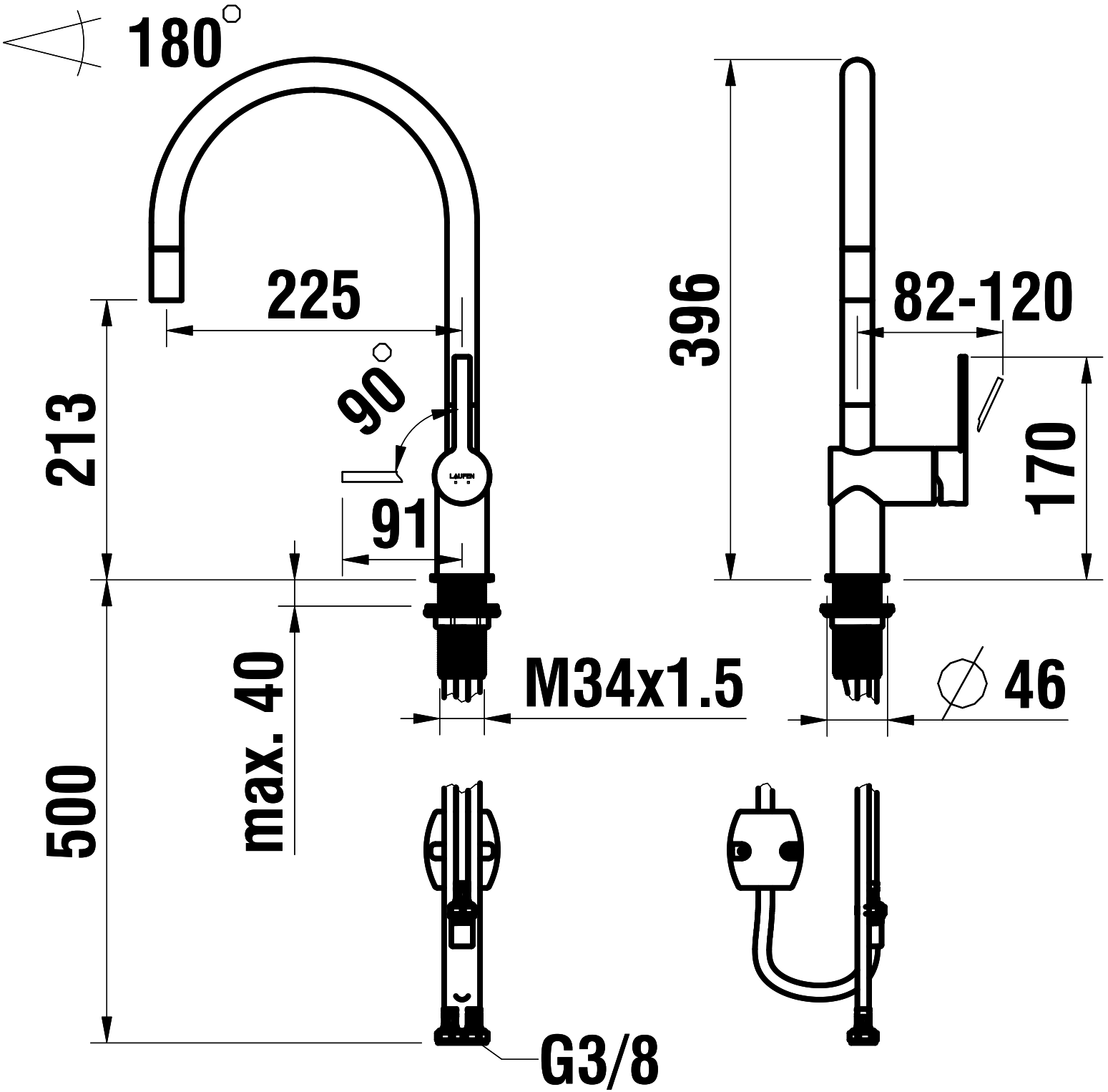
180°
225
213
90°
91
396
82-120
170
max. 40
500
M34x1.5
∅ 46
G3/8