Laufen Kiano

> Web link



Serie
Laufen Kiano

Version
Side Lever C

Article no.
40.003.038.00

Model
Swivel spout

Surface
PVD coating, Inox Black

Price CHF
407.- excl. VAT

Product description

Label Swiss Energy

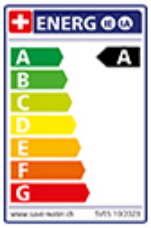

Pivoting Range
360°

Flow Rate
7.70 (l / min (3bar))

Water jet
Normal jet

Lever position
Right

Water connection
Flexible connecting hose

Extra
Ceramic cartridge

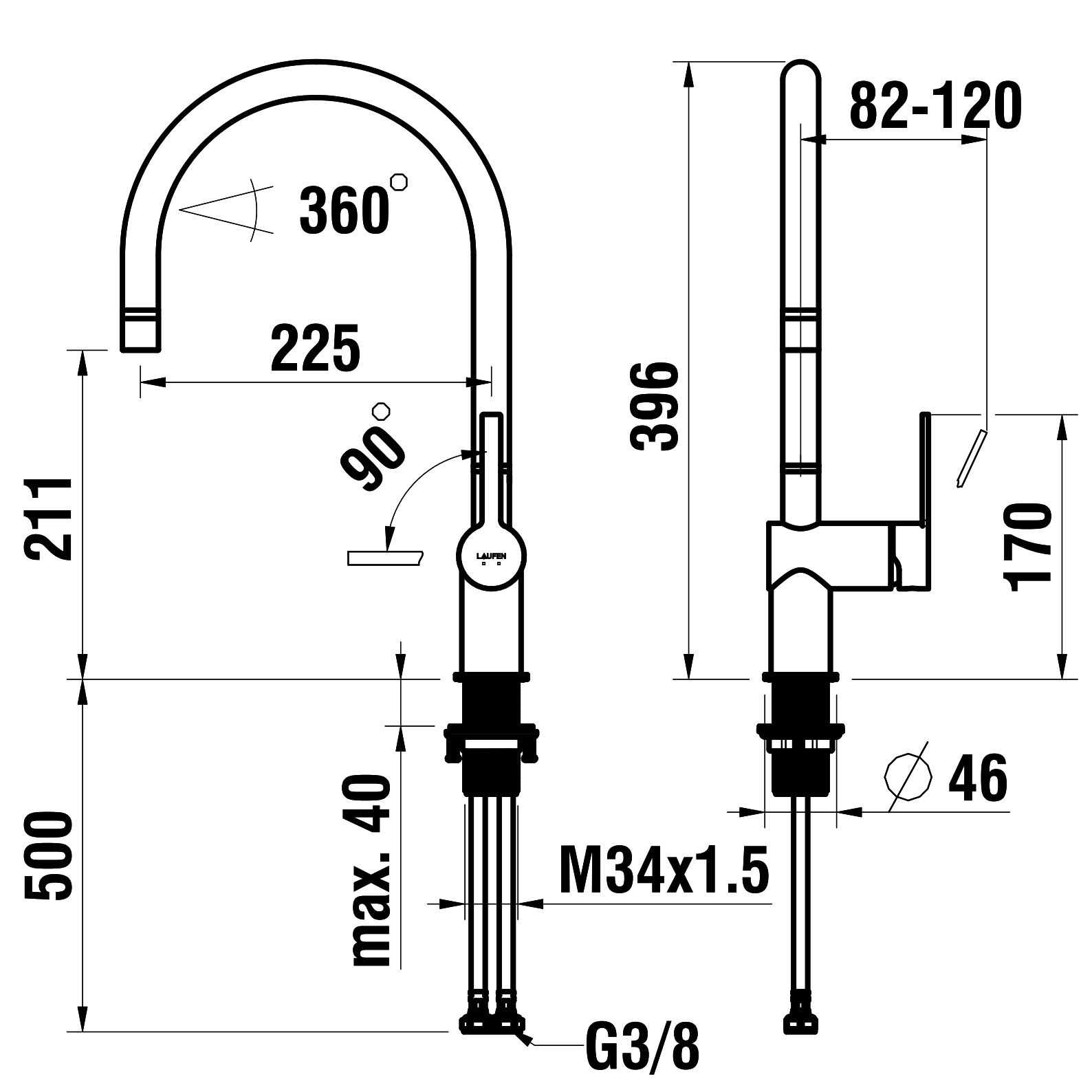
360°
225
90°
211
500
max. 40
M34x1.5
G3/8
LAUFEN
82-120
396
170
∅ 46