## Laufen Lico

> Web link



**Serie**
Laufen Lico

**Article no.**
40.003.045.00

**Model**
Bypass fitting, pull out spout

**Surface**
Stainless steel, solid

**Price CHF**
649.- excl. VAT

### Product description

Possible uses: Bypass drinking water supply, to bypass water softeners

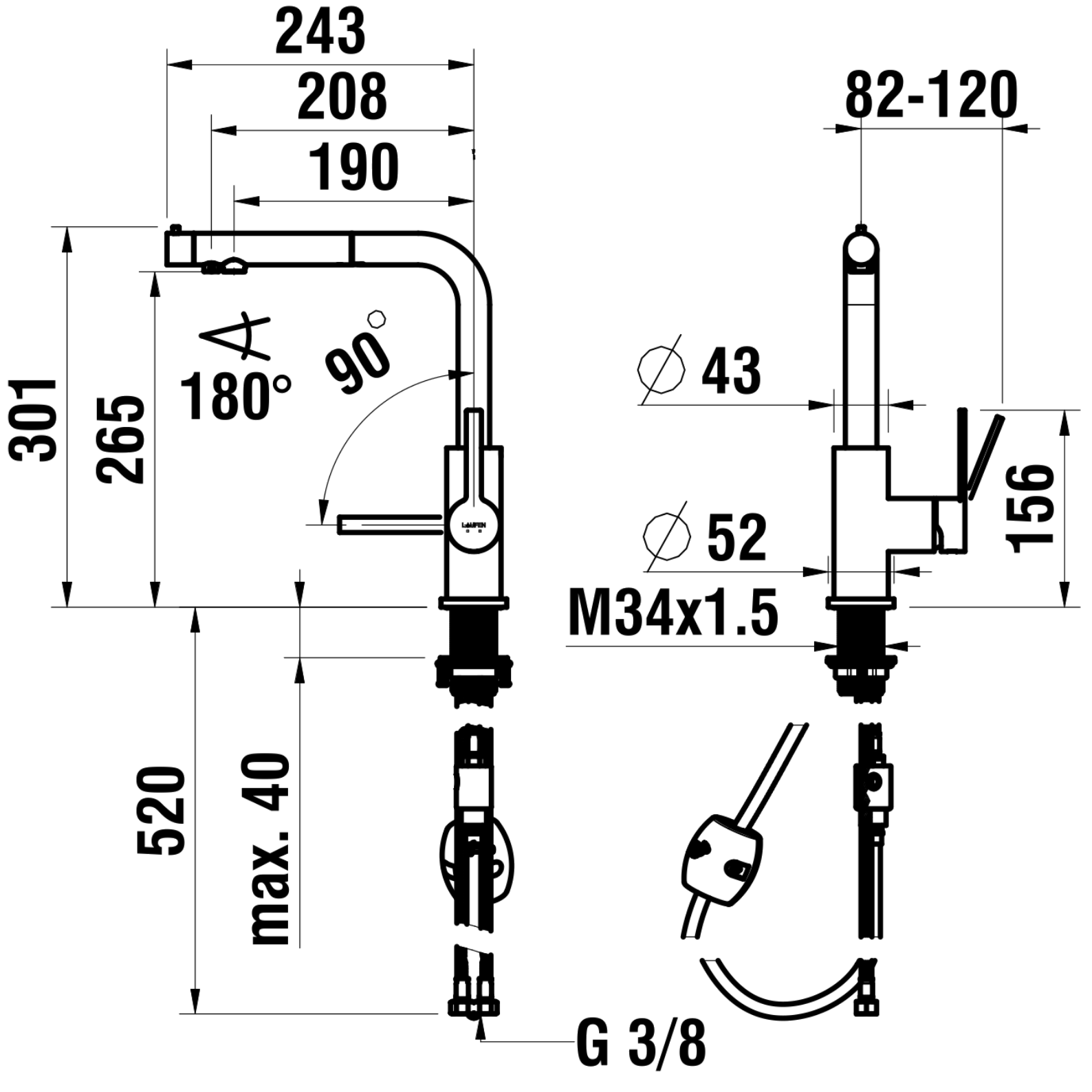
243
208
190
82-120
301
265
180°
90°
∅ 43
∅ 52
156
M34x1.5
520
max. 40
G 3/8