Laufen Lico

> Web link



Serie
Laufen Lico

Article no.
40.003.046.00

Model
Bypass fitting, pull out spout

Surface
PVD coating, Inox Black

Price CHF
802.- excl. VAT

Product description

Possible uses: Bypass drinking water supply, to bypass water softeners

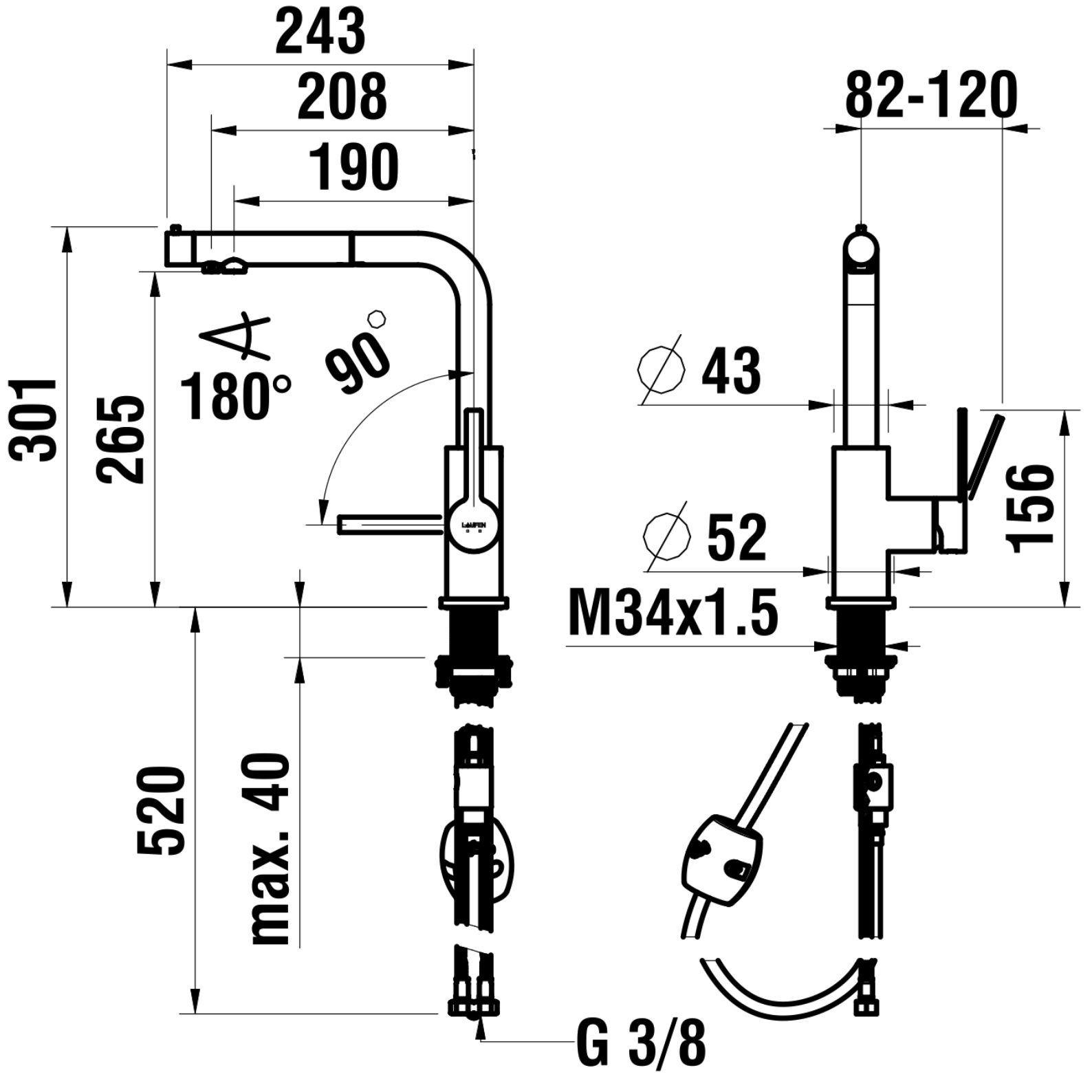
243
208
190
82-120
301
265
180°
90°
∅ 43
∅ 52
156
M34x1.5
520
max. 40
G 3/8