Linero LIO 18U + LIO 34U

> Web link



Fitting style
Undermount bowls

Model
LIO 18U + LIO 34U

Material
Stainless steel 18/10

Article no.
10.105.539.00

Cabinet size
60 cm

Basket
3½" Tipo Desino

Surface
Matt

Price CHF
2'188.- excl. VAT

Dimensions
180x400x140mm

Corner radius
15 mm

Overflow and drain technology



Tipo Desino: Concealed drain with basket underneath - type M



Swivelling overflow cap

Basket pre-assembly
Basket pre-assembly ex works

Dispenser - mounting option
Free choice of positioning

Overflow and drain technology

Prices (as of 27.11.26/excl. VAT)

Model	Material	Basket	Article no.	Price CHF	
Linero LIO 18U+34U	Stainless steel 18/10, Matt	3½" Tipo Desino	10.105.539.00	2'188.-	> Weblink
		3½" Space-saving Desino	10.105.538.00	2'188.-	> Weblink
		3½" TouchFlow Desino	10.105.537.00	2'398.-	> Weblink

Product description

Combination LIO 18U + LIO 34U: Requires cut-out on both sides of the carcase wall, with enlarged cut-out for LIO 18U.

The Desino Drain Sieve is dishwasher-safe and can be cleaned completely or separately up to a maximum temperature of 65°C.

Accessory

Optional accessories



> Weblink
40.000.912.00 / CHF 106.-
Colander, perforated



> Weblink
40.001.289.00 / CHF 106.-
Colander, unperforated



> Weblink
40.000.909.00 / CHF 151.-
Chopping board, made of glass, white



> Weblink
40.001.277.00 / CHF 151.-
Chopping board, made of plastic

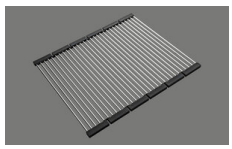

> Weblink
40.001.138.00 / CHF 125.-
Inox Pad

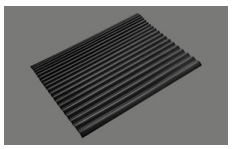

> Weblink
40.002.008.00 / CHF 51.-
Maro dish drainer mat, Dark Grey

Spares

You can find the compatible ragne of spares here > Weblink

Suter Inox AG
Schachenstrasse 20
CH-5116 Schinznach-Bad
T +41 56 463 64 00
suter@suter.ch
suter.ch

Linero LIO 18U + LIO 34U Desino

Masse / Ausschnittkontur
Dimensions / contour de découpe
Dimensioni / contorno dell'apertura

SUTER

Bohrung für Zug- und Druckknöpfe Ø14
Bohrung für Drehknopf Ø25

Trou pour boutons et Poussoirs de commande Ø14
Trou pour bouton rotatif Ø25

Foro per Pomelli tiranti e Pomelli pulsanti Ø14
Foro per Pomolo girevoli Ø25

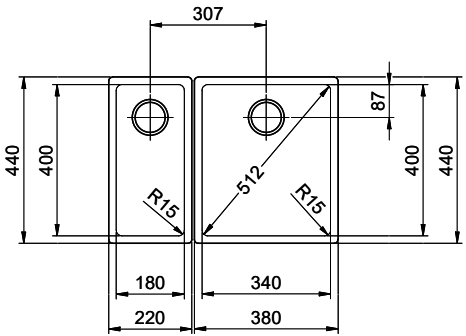

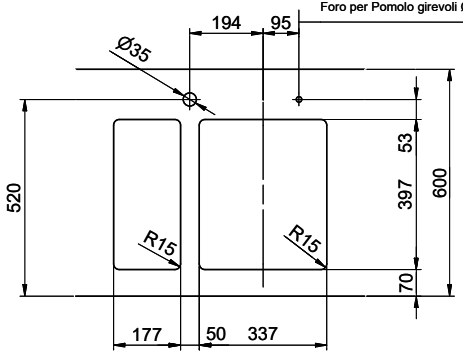

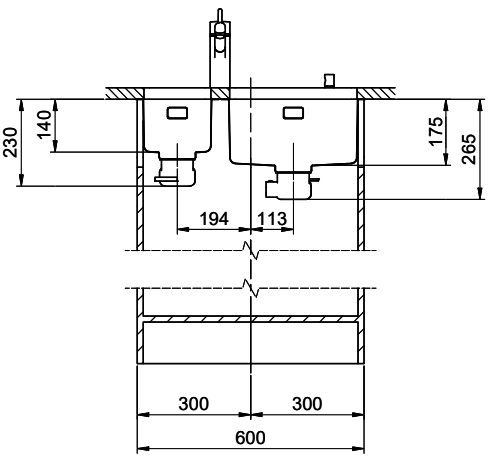

Kombination LIO 18 + LIO 34: Erfordert beidseitigen Ausschnitt der Korpuswand.
Combinaison LIO 18 + LIO 34: Exige la découpe de la paroi de l'élément des deux côtés.
Combinazione LIO 18 + LIO 34: Richiede un intaglio della parete dell'armadio su entrambi i lati.

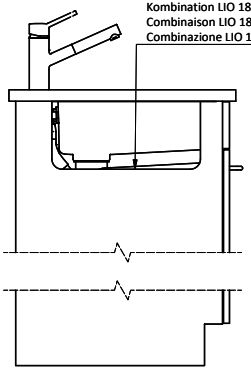

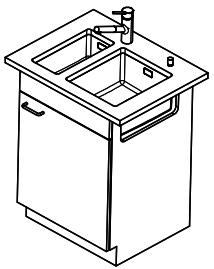

Für dieses Dokument und den darin dargestellten Gegenstand behalten wir uns alle Rechte vor. Vervielfältigung, Bekanntgabe an Dritte oder Verwendung seines Inhalts, ohne unsere Zustimmung ist verboten. © Copyright 2005 Suter Inox AG. All rights reserved.

Zeichn.Nr.:	Dok.Nr.: 00.01-24.0015.00.00	Index:	sam	19.09.2024