Linero LIO 50U

> Web link



Overflow and drain technology

Fitting style
Undermount bowls

Model
LIO 50U

Material
Stainless steel 18/10

Article no.
10.105.227.00

Cabinet size
55 cm

Basket
3½" eFlow Desino

Surface
Matt

VRG
0.19

Price CHF
1'701.- excl. VAT

Dimensions
500x400x175mm

Corner radius
15 mm



Desino: Concealed drain with basket underneath - type M



Concealed overflow eFlow

Basket pre-assembly
Basket pre-assembly ex works

Dispenser - mounting option
Free choice of positioning

Overflow and drain technology
Standard pull-up knob

Prices (as of 23.11.26/excl. VAT)

Model	Material	Basket	Article no.	Price CHF	
Linero LIO 50U	Stainless steel 18/10, Matt	3½" Tipo Desino	10.105.551.00	1'376.-	> Weblink
		3½" Space-saving Desino	10.105.229.00	1'376.-	> Weblink
		3½" TouchFlow Desino	10.105.228.00	1'586.-	> Weblink
		3½" eFlow Desino	10.105.227.00	1'701.-	> Weblink

Product description

The Desino Drain Sieve is dishwasher-safe and can be cleaned completely or separately up to a maximum temperature of 65°C.

Accessory

Optional accessories



> Weblink
40.000.912.00 / CHF 106.-
Colander, perforated



> Weblink
40.001.289.00 / CHF 106.-
Colander, unperforated



> Weblink
40.000.909.00 / CHF 151.-
Chopping board, made of glass, white



> Weblink
40.001.277.00 / CHF 151.-
Chopping board, made of plastic

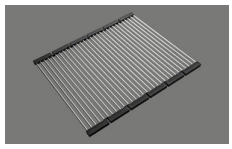

> Weblink
40.001.138.00 / CHF 125.-
Inox Pad

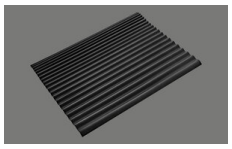

> Weblink
40.002.008.00 / CHF 51.-
Maro dish drainer mat, Dark Grey

Spares

You can find the compatible ragne of spares here > Weblink

Suter Inox AG
Schachenstrasse 20
CH-5116 Schinznach-Bad
T +41 56 463 64 00
suter@suter.ch
suter.ch

Linero LIO 50U Desino

Masse / Ausschnittkontur
Dimensions / contour de découpe
Dimensioni / contorno dell'apertura

SUTER

Bohrung für Zug- und Druckknöpfe Ø14
Bohrung für Drehknopf Ø25

Trou pour boutons et Poussoirs de commande Ø14
Trou pour bouton rotatif Ø25

Foro per Pomelli tiranti e Pomelli pulsanti Ø14
Foro per Pomolo girevoli Ø25

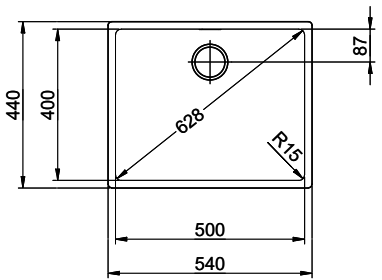

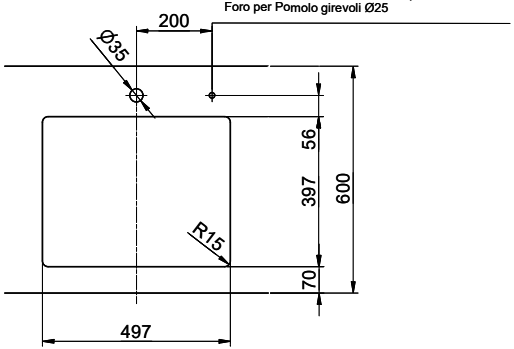

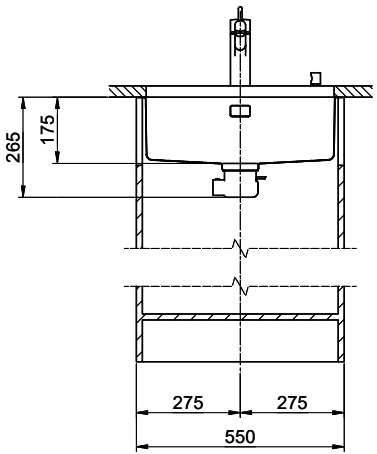

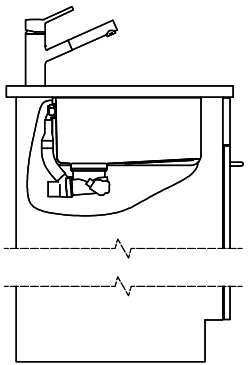

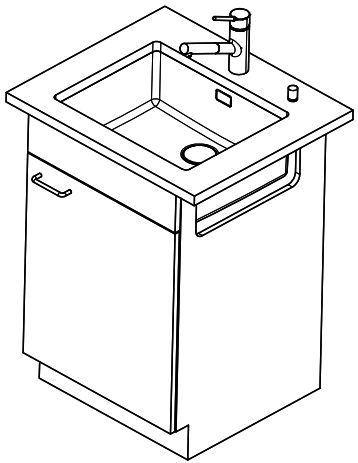

Für dieses Dokument und den darin dargestellten Gegenstand behalten wir uns alle Rechte vor. Vervielfältigung, Bekanntgabe an Dritte oder Verwendung seines Inhalts, ohne unsere Zustimmung ist verboten. © Copyright 2005 Suter Inox AG. All rights reserved.

Zeichn.Nr.:	Dok.Nr.: 00.01-23.0033.00.00	Index:	sam	12.09.2023