## Linero LIO 50U

> Web link




**Fitting style**
Undermount bowls

**Model**
LIO 50U

**Material**
Stainless steel 18/10

**Article no.**
10.105.229.00

**Cabinet size**
55 cm

**Basket**
3½" Space-saving Desino

**Surface**
Matt

**Price CHF**
1'376.- excl. VAT

**Dimensions**
500x400x175mm

**Corner radius**
15 mm

**Overflow and drain technology**



Desino: Concealed drain with basket underneath - type M



Swivelling overflow cap

**Basket pre-assembly**

Basket pre-assembly ex works

**Dispenser - mounting option**

Free choice of positioning

**Overflow and drain technology**

**Standard pull-up knob**



Advant

**Prices** (as of 23.11.26/excl. VAT)

| Model | Material | Basket | Article no. | Price CHF | |
|---|---|---|---|---|---|
| Linero LIO 50U | Stainless steel 18/10, Matt | 3½" Tipo Desino | 10.105.551.00 | 1'376.- | > Weblink |
| | | 3½" Space-saving Desino | 10.105.229.00 | 1'376.- | > Weblink |
| | | 3½" TouchFlow Desino | 10.105.228.00 | 1'586.- | > Weblink |
| | | 3½" eFlow Desino | 10.105.227.00 | 1'701.- | > Weblink |

### Product description

The Desino Drain Sieve is dishwasher-safe and can be cleaned completely or separately up to a maximum temperature of 65°C.

### Accessory

Optional accessories



> Weblink
40.000.912.00 / CHF 106.-
Colander, perforated



> Weblink
40.001.289.00 / CHF 106.-
Colander, unperforated



> Weblink
40.000.909.00 / CHF 151.-
Chopping board, made of glass, white



> Weblink
40.001.277.00 / CHF 151.-
Chopping board, made of plastic

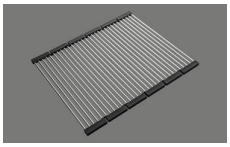

> Weblink
40.001.138.00 / CHF 125.-
Inox Pad

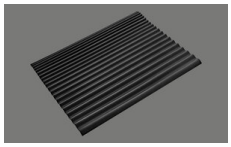

> Weblink
40.002.008.00 / CHF 51.-
Maro dish drainer mat, Dark Grey

### Spares

You can find the compatible ragne of spares here > Weblink

**Suter Inox AG**
Schachenstrasse 20
CH-5116 Schinznach-Bad
T +41 56 463 64 00
suter@suter.ch
suter.ch

# Linero LIO 50U Desino

**Masse / Ausschnittkontur**
**Dimensions / contour de découpe**
**Dimensioni / contorno dell'apertura**

SUTER

Bohrung für Zug- und Druckknöpfe Ø14
Bohrung für Drehknopf Ø25

Trou pour boutons et Poussoirs de commande Ø14
Trou pour bouton rotatif Ø25

Foro per Pomelli tiranti e Pomelli pulsanti Ø14
Foro per Pomolo girevoli Ø25

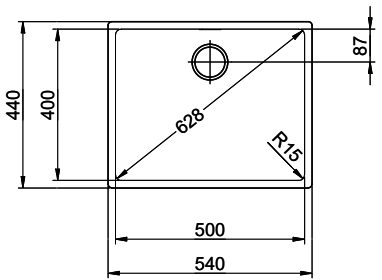


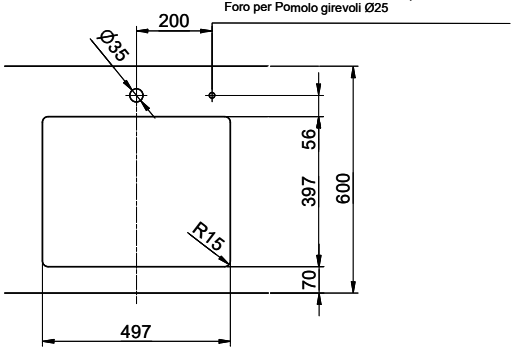


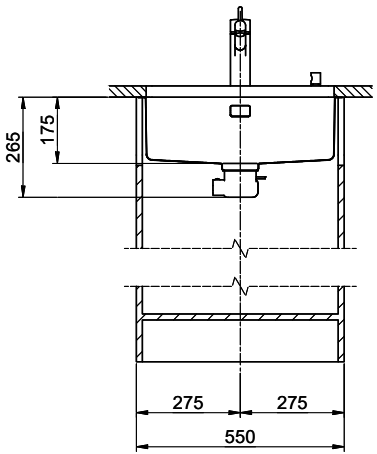


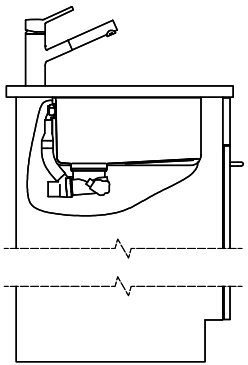

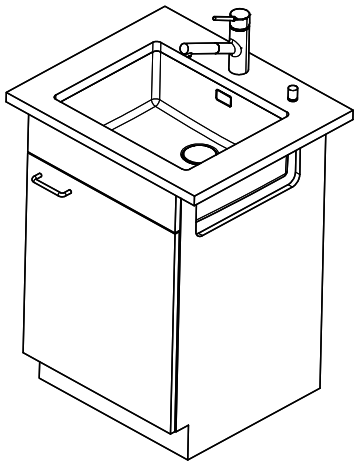

Für dieses Dokument und den darin dargestellten Gegenstand behalten wir uns alle Rechte vor. Vervielfältigung, Bekanntgabe an Dritte oder Verwendung seines Inhalts, ohne unsere Zustimmung ist verboten. © Copyright 2005 Suter Inox AG. All rights reserved.

| Zeichn.Nr.: | Dok.Nr.: 00.01-23.0033.00.00 | Index: | sam | 12.09.2023 |
|---|---|---|---|---|