## Linero LIO CDAB 50U/2, Black Edition

> Web link




**Overflow and drain technology**

**Fitting style**
Undermount bowls

**Model**
LIO CDAB 50U/2, Black Edition

**Material**
Cristadur

**Article no.**
10.105.310.50

**Cabinet size**
55 cm

**Basket**
3½" TouchFlow Desino

**Color**
Puro

**VRG**
0.19

**Price CHF**
1'827.- excl. VAT

**Dimensions**
500x400x165mm

**Corner radius**
15 mm



Desino: Concealed drain with basket underneath - type M, Black Edition



Swivelling TouchFlow overflow cap - Black Edition

**Basket pre-assembly**
Basket pre-assembly ex works

**Dispenser - mounting option**
Free choice of positioning

**Recommendation for use with boiling water taps**
Yes

**Overflow and drain technology**
**Standard pull-up knob**

### **Prices** (as of 27.11.26/excl. VAT)

| Model | Material | Basket | Article no. | Price CHF | |
|---|---|---|---|---|---|
| Linero LIO CDAB 50U/2 Black Ed... | Cristadur, Puro | 3½" Tipo Desino | 10.105.576.50 | 1'617.- | > Weblink |
| | | 3½" Space-saving Desino | 10.105.311.50 | 1'617.- | > Weblink |
| | | 3½" TouchFlow Desino | 10.105.310.50 | 1'827.- | > Weblink |

### Product description

The Desino Drain Sieve is dishwasher-safe and can be cleaned completely or separately up to a maximum temperature of 65°C.

### Accessory

Optional accessories



> Weblink
40.000.912.00 / CHF 106.-
Colander, perforated



> Weblink
40.001.289.00 / CHF 106.-
Colander, unperforated



> Weblink
40.001.277.00 / CHF 151.-
Chopping board, made of plastic



> Weblink
40.000.909.00 / CHF 151.-
Chopping board, made of glass, white

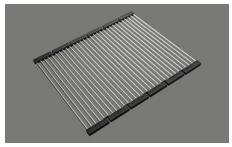

> Weblink
40.001.138.00 / CHF 125.-
Inox Pad



> Weblink
40.001.509.00 / CHF 29.-
Easy Care cleaning kit for granite sinks

Suter Inox AG
Schachenstrasse 20
CH-5116 Schinznach-Bad
T +41 56 463 64 00
suter@suter.ch
suter.ch

# Linero LIO CD 50U/2 Desino

**Masse / Ausschnittkontur**
**Dimensions / contour de découpe**
**Dimensioni / contorno dell'apertura**

SUTER

Bohrung für Zug- und Druckknöpfe Ø14
Bohrung für Drehknopf Ø25

Trou pour boutons et Poussoirs de commande Ø14
Trou pour bouton rotatif Ø25

Foro per Pomelli tiranti e Pomelli pulsanti Ø14
Foro per Pomolo girevoli Ø25

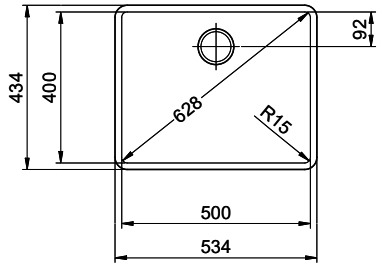


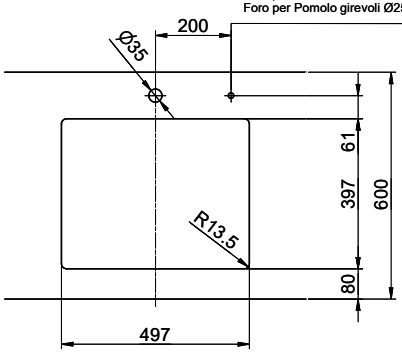


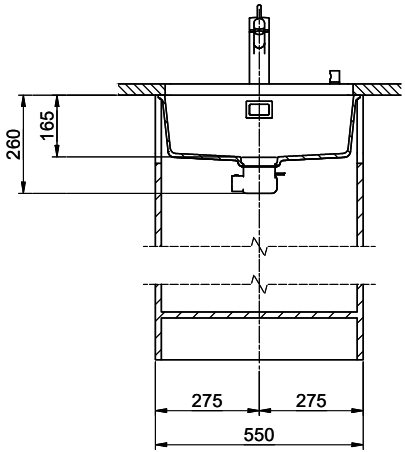


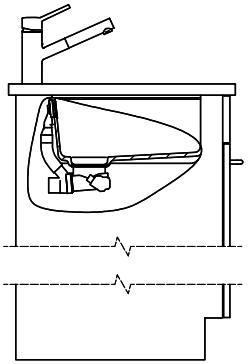

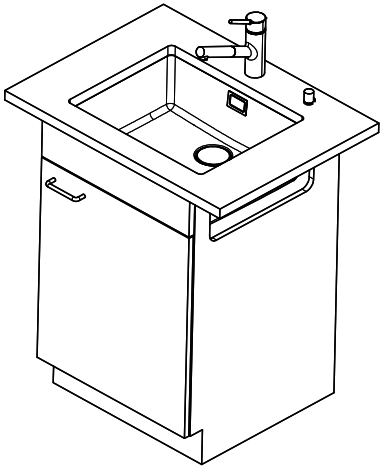

Für dieses Dokument und den darin dargestellten Gegenstand behalten wir uns alle Rechte vor. Vervielfältigung, Bekanntgabe an Dritte oder Verwendung seines Inhalts, ohne unsere Zustimmung ist verboten. © Copyright 2005 Suter Inox AG. All rights reserved.

| Zeichn.Nr.: | Dok.Nr.: 00.01-23.0100.00.00 | Index: | sam | 17.10.2023 |
|---|---|---|---|---|