Nemo NEM N 100

> Web link



Fitting style
Topmount sinks

Model
NEM N 100

Material
Cristalite Plus

Article no.
10.102.994.00

Cabinet size
55 cm

Basket
3½" Space-saving

Color
Nero

Price CHF
1'260.- excl. VAT

Dimensions
513x358x180mm

Corner radius
15 mm

Basket pre-assembly
without valve assembly

Standard turning knob



Turning knob Schock

Prices (as of 24.11.26/excl. VAT)

Model	Material	Basket	Article no.	Price CHF	
Nemo NEM N 100	Cristalite Plus, Nero	3½" Space-saving	10.102.994.00	1'260.-	> Weblink

Product description

Material
Granite sinks Cristalite Plus: Schock sinks are composed of approx. 80 % quartz, the hardest component of granite. The quartz is bound by the highest quality of acrylic. The composition of acrylic and quartz makes the sinks extremely resistant against scratches and dirt and is responsible for their longevity.

Color identification Schock: Nero

Fittings and knob holes to be provided by the customer; see the installation instructions.

Compatible Articles



> Weblink
40.001.024.00 / CHF
427.-
Müllex Boxx 55/60-R Bio

Spares

You can find the compatible ragne of spares here > Weblink

Suter Inox AG
Schachenstrasse 20
CH-5116 Schinznach-Bad
T +41 58 263 64 00
suter@suterch
suter.ch

Nemo NEM N 100

Masse / Ausschnittkontur
Dimensions / contour de découpe
Dimensioni / contorno dell apertura

SUTER

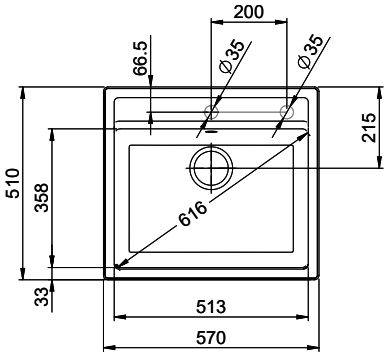

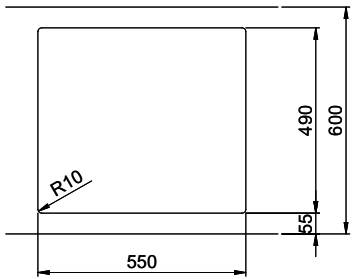

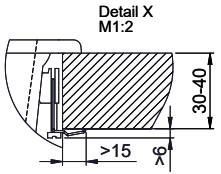

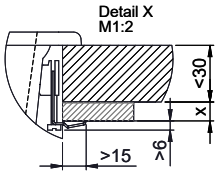

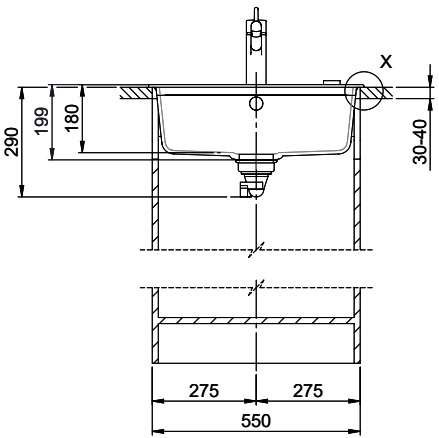

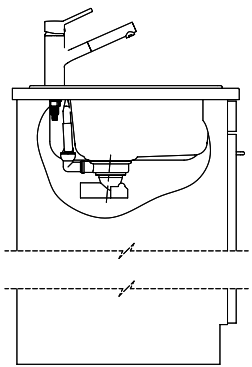

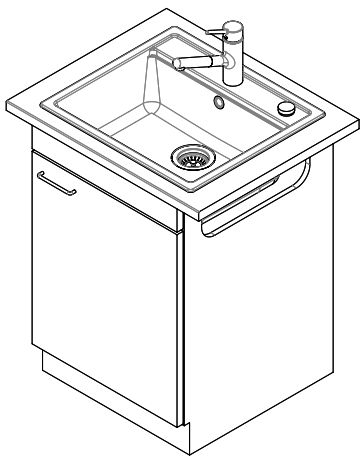

Für dieses Dokument und den darin dargestellten Gegenstand behalten wir uns alle Rechte vor. Vervielfältigung, Bekanntgabe an Dritte oder Verwendung seines Inhalts ohne unsere Zustimmung ist verboten. © Copyright 2005 Suter Inox AG. All rights reserved.

Zeichn. Nr.:	Dok. Nr.:00.01-12.0012.00.00	Index: A+	daf	30.10.2012