Silver Star SIL 18/34U

> Web link



Overflow and drain technology

Fitting style
Undermount bowls

Model
SIL 18/34U

Material
Stainless steel 18/10

Article no.
10.103.619.00

Cabinet size
60 cm

Basket
3½" Tipo

Surface
Polished

Price CHF
1'277.- excl. VAT

Dimensions
340x420x175mm

Corner radius
50 mm



Sieve - type S



Concealed overflow

Basket pre-assembly
Assembly of the valve at the factory

Dispenser - mounting option
Free choice of positioning

Overflow and drain technology
Standard pull-up knob

Prices (as of 23.11.26/excl. VAT)

Model	Material	Basket	Small bowl	Article no.	Price CHF	
Silver Star SIL 18/34U	Stainless steel 18/10, Matt	3½" Tipo	Left	10.103.092.00	1'277.-	> Weblink
	Stainless steel 18/10, Polished	3½" Tipo	Left	10.103.619.00	1'277.-	> Weblink
	Stainless steel 18/10, Matt	3½" Tipo	Right	10.103.093.00	1'277.-	> Weblink
	Stainless steel 18/10, Polished	3½" Tipo	Right	10.103.622.00	1'277.-	> Weblink
	Stainless steel 18/10, Matt	3½" Space-saving	Left	10.102.667.00	1'318.-	> Weblink
	Stainless steel 18/10, Polished	3½" Space-saving	Right	10.103.621.00	1'318.-	> Weblink
	Stainless steel 18/10, Matt	3½" Space-saving	Right	10.102.668.00	1'318.-	> Weblink
	Stainless steel 18/10, Polished	3½" Space-saving	Left	10.103.618.00	1'318.-	> Weblink

Accessory

Optional accessories



> Weblink
40.000.914.00 / CHF 106.-
Colander, perforated



> Weblink
40.001.290.00 / CHF 106.-
Colander, unperforated



> Weblink
40.000.915.00 / CHF 151.-
Chopping board, made of glass, white

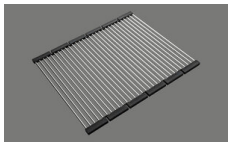

> Weblink
40.001.138.00 / CHF 125.-
Inox Pad

Compatible Articles



> Weblink
40.001.314.00 / CHF 155.-
Dispenser Nano



> Weblink
40.001.024.00 / CHF 427.-
Müllex Boxx 55/60-R Bio

Silver Star SIL 18/34U

> Web link

Spares

You can find the compatible ragne of spares here > Weblink

Suter Inox AG
Schachenstrasse 20
CH-5116 Schinznach-Bad
T +41 56 463 64 00
suter@suterch
suter.ch

Silver Star SIL 18/34U

Masse / Ausschnittkontur
Dimensions / contour de découpe
Dimensioni / contorno dell apertura

SUTER

Bohrung für Zug- und Druckknöpfe ø14
Bohrung für Drehknopf ø25

Trou pour boutons et Poussoirs de commande ø14
Trou pour bouton rotatif ø25

Foro per Pomelli tiranti e Pomelli pulsanti ø14
Foro per Pomolo girevoli ø25

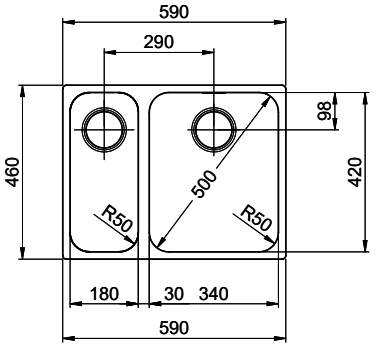

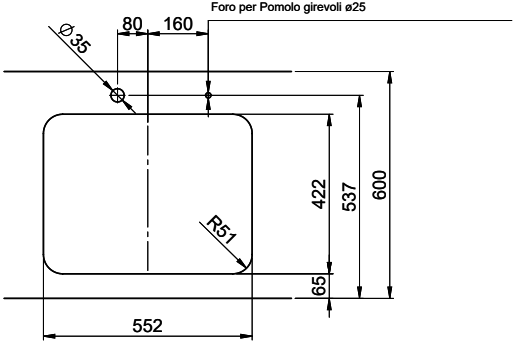

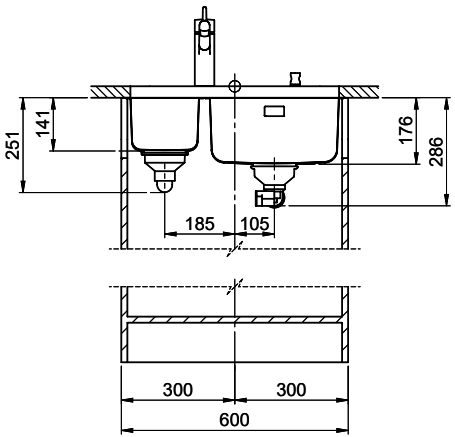

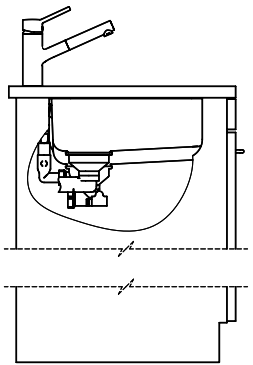

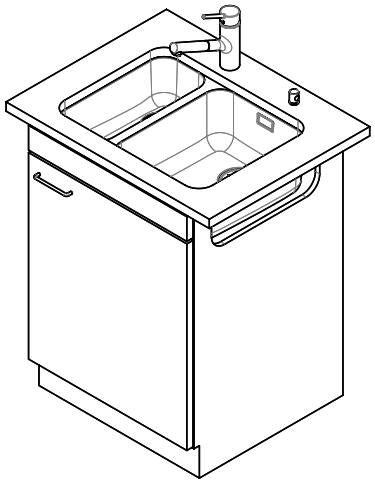

Für diesen Dokument und den darin dargestellten Gegenstand behalten wir uns alle Rechte vor. Vervielfältigung, Bekanntgabe an Dritte oder Verwendung seines Inhalts ohne unsere Zustimmung ist verboten. © Copyright 2005 Suter Inox AG. All rights reserved.

Zeichn. Nr.:	Dok. Nr.: 00.01-22.0124.21.21	Index: 01	daf	25.10.2022