Silver Star SIL 50U + SIL 9U

> Web link



Fitting style
Undermount bowls

Model
SIL 50U
SIL 9U

Material
Stainless steel 18/10

Article no.
10.102.672.00

Cabinet size
55 cm

Basket
3½" Space-saving
1½" strainer basket

Surface
Matt

Price CHF
1'040.- excl. VAT

Dimensions
500x350x165mm
230x90x70mm

Corner radius
50 mm

Overflow and drain technology


Sieve - type S


Concealed overflow

Basket pre-assembly
Assembly of the valve at the factory

Dispenser - mounting option
Free choice of positioning

Overflow and drain technology

Standard pull-up knob


Prime

Prices (as of 24.11.26/excl. VAT)

Model	Material	Basket	Article no.	Price CHF	
Silver StarSIL 50U	Stainless steel 18/10, Matt	3½" Tipo	10.102.564.00	701.-	> Weblink
	Stainless steel 18/10, Polished	3½" Tipo	10.102.814.00	701.-	> Weblink
	Stainless steel 18/10, Matt	3½" Space-saving	10.102.561.00	742.-	> Weblink
	Stainless steel 18/10, Polished	3½" Space-saving	10.102.813.00	742.-	> Weblink
Silver StarSIL 9U	Stainless steel 18/10, Matt	1½" strainer basket	10.102.671.00	330.-	> Weblink
	Stainless steel 18/10, Polished	1½" strainer basket	10.102.836.00	330.-	> Weblink
Silver Star SIL 50U + SIL 9U	Stainless steel 18/10, Matt	3½" Tipo + 1½" strainer basket	10.103.131.00	999.-	> Weblink
	Stainless steel 18/10, Polished	3½" Tipo + 1½" strainer basket	10.103.130.00	999.-	> Weblink
	Stainless steel 18/10, Matt	3½" Space-saving + 1½" strainer basket	10.102.672.00	1'040.-	> Weblink
	Stainless steel 18/10, Polished	3½" Space-saving + 1½" strainer basket	10.102.815.00	1'040.-	> Weblink

Accessory

Optional accessories


> Weblink
40.000.042.00 / CHF 81.-
Colander, perforated


> Weblink
40.000.916.00 / CHF 106.-
Colander, perforated

Compatible Articles


> Weblink
40.001.314.00 / CHF 155.-
Dispenser Nano


> Weblink
40.001.024.00 / CHF 427.-
Müllex Boxx 55/60-R Bio

Silver Star SIL 50U + SIL 9U

> Web link

Spares

You can find the compatible ragne of spares here > Weblink

Suter Inox AG
Schachenstrasse 20
CH-5116 Schinznach-Bad
Tel. +41 56 463 63 33
Fax +41 56 463 63 30
E-Mail: suter@suter.ch

Silver Star SIL 9U + SIL 50U

Masse / Ausschnittkontur

SUTER inox technik

Becken 500 x 350 x 165mm, 17 Liter
Becken 230 x 90 x 70mm, 1 Liter

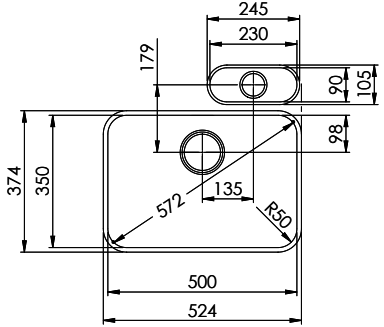

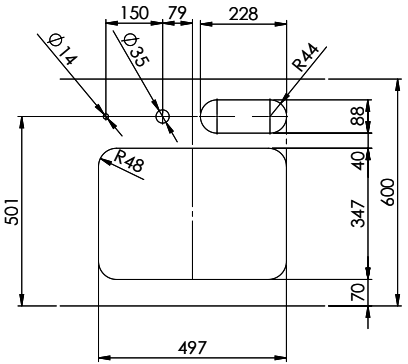

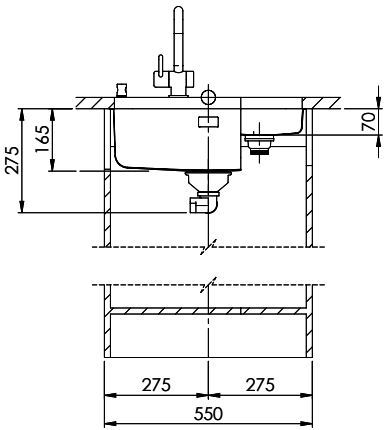

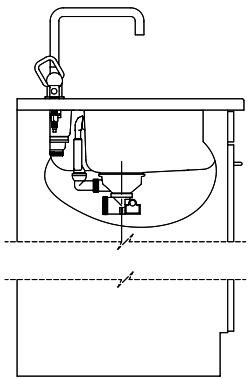

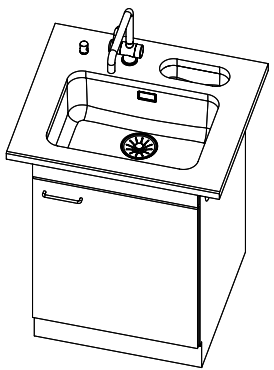

Für dieses Dokument und den darin dargestellten Gegenstand behalten wir uns alle Rechte vor. Vervielfältigung, Bekanntgabe an Dritte oder Verwendung seines Inhalts ohne unsere Zustimmung ist verboten. © Copyright 2003 Suter Inox AG. All rights reserved.

Art.Nr.:	Zeichn.Nr.: 12.01-07.1026.00.00	Index: A+	daf	28.12.2017