## Silver Star SIL 50U + SIL 9U

> Web link




**Fitting style**
Undermount bowls

**Model**
SIL 50U
SIL 9U

**Material**
Stainless steel 18/10

**Article no.**
10.103.130.00

**Cabinet size**
55 cm

**Basket**
3½" Tipo
1½" strainer basket

**Surface**
Polished

**Price CHF**
999.- excl. VAT

**Dimensions**
500x350x165mm
230x90x70mm

**Corner radius**
50 mm

**Overflow and drain technology**


Sieve - type S


Concealed overflow

**Basket pre-assembly**
Assembly of the valve at the factory

**Dispenser - mounting option**
Free choice of positioning

**Overflow and drain technology**
**Standard pull-up knob**

### Prices (as of 24.11.26/excl. VAT)

| Model | Material | Basket | Article no. | Price CHF | |
|---|---|---|---|---|---|
| Silver StarSIL 50U | Stainless steel 18/10, Matt | 3½" Tipo | 10.102.564.00 | 701.- | > Weblink |
| | Stainless steel 18/10, Polished | 3½" Tipo | 10.102.814.00 | 701.- | > Weblink |
| | Stainless steel 18/10, Matt | 3½" Space-saving | 10.102.561.00 | 742.- | > Weblink |
| | Stainless steel 18/10, Polished | 3½" Space-saving | 10.102.813.00 | 742.- | > Weblink |
| Silver StarSIL 9U | Stainless steel 18/10, Matt | 1½" strainer basket | 10.102.671.00 | 330.- | > Weblink |
| | Stainless steel 18/10, Polished | 1½" strainer basket | 10.102.836.00 | 330.- | > Weblink |
| Silver Star SIL 50U + SIL 9U | Stainless steel 18/10, Matt | 3½" Tipo + 1½" strainer basket | 10.103.131.00 | 999.- | > Weblink |
| | Stainless steel 18/10, Polished | 3½" Tipo + 1½" strainer basket | 10.103.130.00 | 999.- | > Weblink |
| | Stainless steel 18/10, Matt | 3½" Space-saving + 1½" strainer basket | 10.102.672.00 | 1'040.- | > Weblink |
| | Stainless steel 18/10, Polished | 3½" Space-saving + 1½" strainer basket | 10.102.815.00 | 1'040.- | > Weblink |

### Accessory

Optional accessories


> Weblink
40.000.042.00 / CHF 81.-
Colander, perforated


> Weblink
40.000.916.00 / CHF 106.-
Colander, perforated

### Compatible Articles


> Weblink
40.001.314.00 / CHF 155.-
Dispenser Nano


> Weblink
40.001.024.00 / CHF 427.-
Müllex Boxx 55/60-R Bio

## Silver Star SIL 50U + SIL 9U

> Web link

### Spares

You can find the compatible ragne of spares here > Weblink

**Suter Inox AG**
Schachenstrasse 20
CH-5116 Schinznach-Bad
T +41 58 263 64 00
suter@suter.ch
suter.ch

# Silver Star SIL 9 + SIL 50U

**Masse / Ausschnittkontur**
**Dimensions / contour de découpe**
**Dimensioni / contorno dell apertura**

SUTER

Bohrung für Zug- und Druckknöpfe ø14
Bohrung für Drehknopf ø25

Trou pour boutons et Poussoirs de commande ø14
Trou pour bouton rotatif ø25

Foro per Pomelli tiranti e Pomelli pulsanti ø14
Foro per Pomolo girevoli ø25

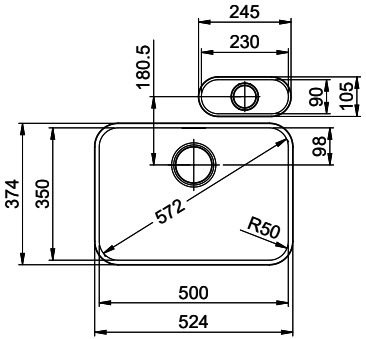


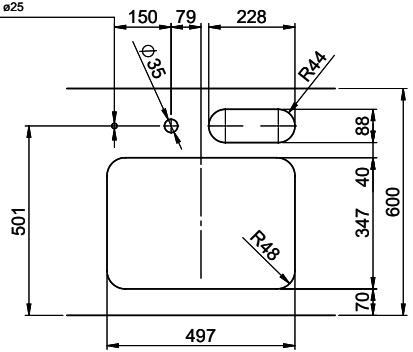


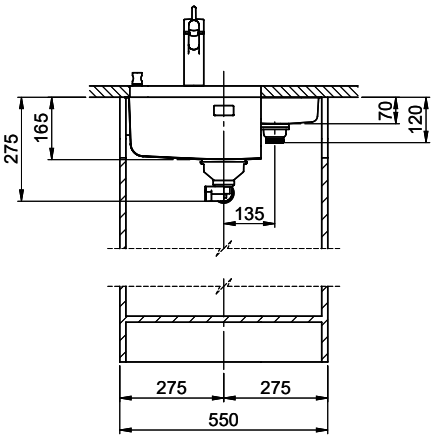


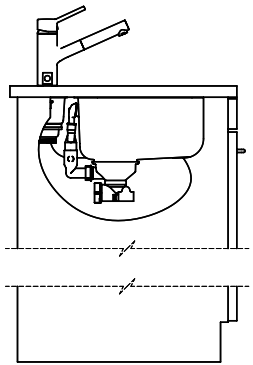

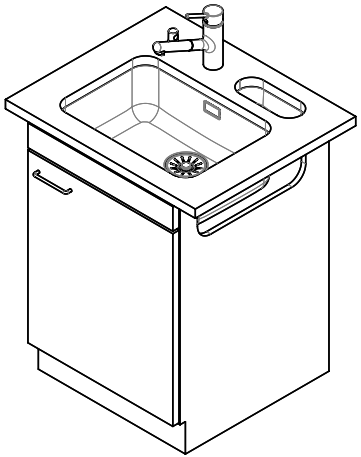

Für diesen Dokument und den darin dargestellten Gegenstand behalten wir uns alle Rechte vor. Vervielfältigung, Bekanntgabe an Dritte oder Verwendung seines Inhalts ohne unsere Zustimmung ist verboten. © Copyright 2005 Suter Inox AG. All rights reserved.

| Zeichn. Nr.: | Dok. Nr.: 00.01-22.0129.21.21 | Index: 01 | daf | 26.10.2022 |
|---|---|---|---|---|