Silver Star SIL 50U + SIL 9U

> Web link



Fitting style
Undermount bowls

Model
SIL 50U
SIL 9U

Material
Stainless steel 18/10

Article no.
10.103.131.00

Cabinet size
55 cm

Basket
3½" Tipo
1½" strainer basket

Surface
Matt

Price CHF
999.- excl. VAT

Dimensions
500x350x165mm
230x90x70mm

Corner radius
50 mm

Overflow and drain technology


Sieve - type S


Concealed overflow

Basket pre-assembly
Assembly of the valve at the factory

Dispenser - mounting option
Free choice of positioning

Overflow and drain technology
Standard pull-up knob

Prices (as of 23.11.26/excl. VAT)

Model	Material	Basket	Article no.	Price CHF	
Silver StarSIL 50U	Stainless steel 18/10, Matt	3½" Tipo	10.102.564.00	701.-	> Weblink
	Stainless steel 18/10, Polished	3½" Tipo	10.102.814.00	701.-	> Weblink
	Stainless steel 18/10, Matt	3½" Space-saving	10.102.561.00	742.-	> Weblink
	Stainless steel 18/10, Polished	3½" Space-saving	10.102.813.00	742.-	> Weblink
Silver StarSIL 9U	Stainless steel 18/10, Matt	1½" strainer basket	10.102.671.00	330.-	> Weblink
	Stainless steel 18/10, Polished	1½" strainer basket	10.102.836.00	330.-	> Weblink
Silver Star SIL 50U + SIL 9U	Stainless steel 18/10, Matt	3½" Tipo + 1½" strainer basket	10.103.131.00	999.-	> Weblink
	Stainless steel 18/10, Polished	3½" Tipo + 1½" strainer basket	10.103.130.00	999.-	> Weblink
	Stainless steel 18/10, Matt	3½" Space-saving + 1½" strainer basket	10.102.672.00	1'040.-	> Weblink
	Stainless steel 18/10, Polished	3½" Space-saving + 1½" strainer basket	10.102.815.00	1'040.-	> Weblink

Accessory

Optional accessories


> Weblink
40.000.042.00 / CHF 81.-
Colander, perforated


> Weblink
40.000.916.00 / CHF 106.-
Colander, perforated

Compatible Articles


> Weblink
40.001.314.00 / CHF 155.-
Dispenser Nano


> Weblink
40.001.024.00 / CHF 427.-
Müllex Boxx 55/60-R Bio

Silver Star SIL 50U + SIL 9U

> Web link

Spares

You can find the compatible ragne of spares here > Weblink

Suter Inox AG
Schachenstrasse 20
CH-5116 Schinznach-Bad
T +41 58 263 64 00
suter@suter.ch
suter.ch

Silver Star SIL 9 + SIL 50U

Masse / Ausschnittkontur
Dimensions / contour de découpe
Dimensioni / contorno dell apertura

SUTER

Bohrung für Zug- und Druckknöpfe ø14
Bohrung für Drehknopf ø25

Trou pour boutons et Poussoirs de commande ø14
Trou pour bouton rotatif ø25

Foro per Pomelli tiranti e Pomelli pulsanti ø14
Foro per Pomolo girevoli ø25

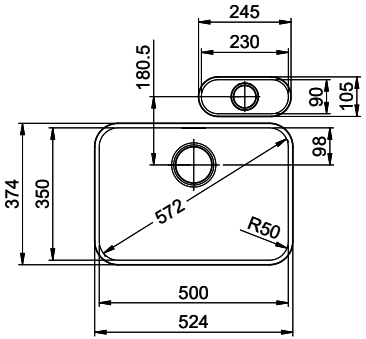

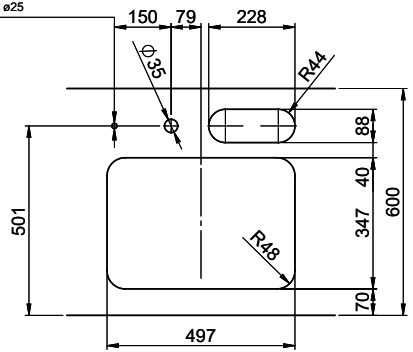

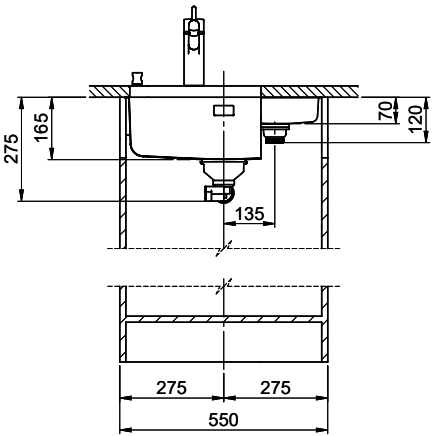

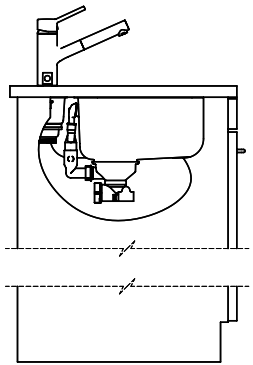

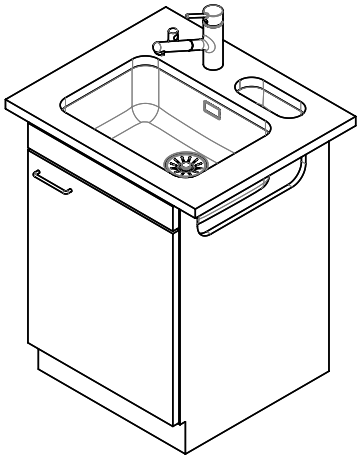

Für diesen Dokument und den darin dargestellten Gegenstand behalten wir uns alle Rechte vor. Vervielfältigung, Bekanntgabe an Dritte oder Verwendung seines Inhalts ohne unsere Zustimmung ist verboten. © Copyright 2005 Suter Inox AG. All rights reserved.

Zeichn. Nr.:	Dok. Nr.: 00.01-22.0129.21.21	Index: 01	daf	26.10.2022