Suter Ambiano

> Web link



Serie
Suter Ambiano

Version
Side Lever L

Article no.
40.003.053.00

Model
Swivel spout

Surface
Powder coating black matt

Price CHF
355.- excl. VAT

Product description

Label Swiss Energy

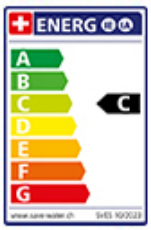

Pivoting Range
360°

Flow Rate
12.90 (l / min (3bar))

Water jet
Normal jet

Lever position
Right

Water connection
Flexible connecting hose

Extra
Ceramic cartridge

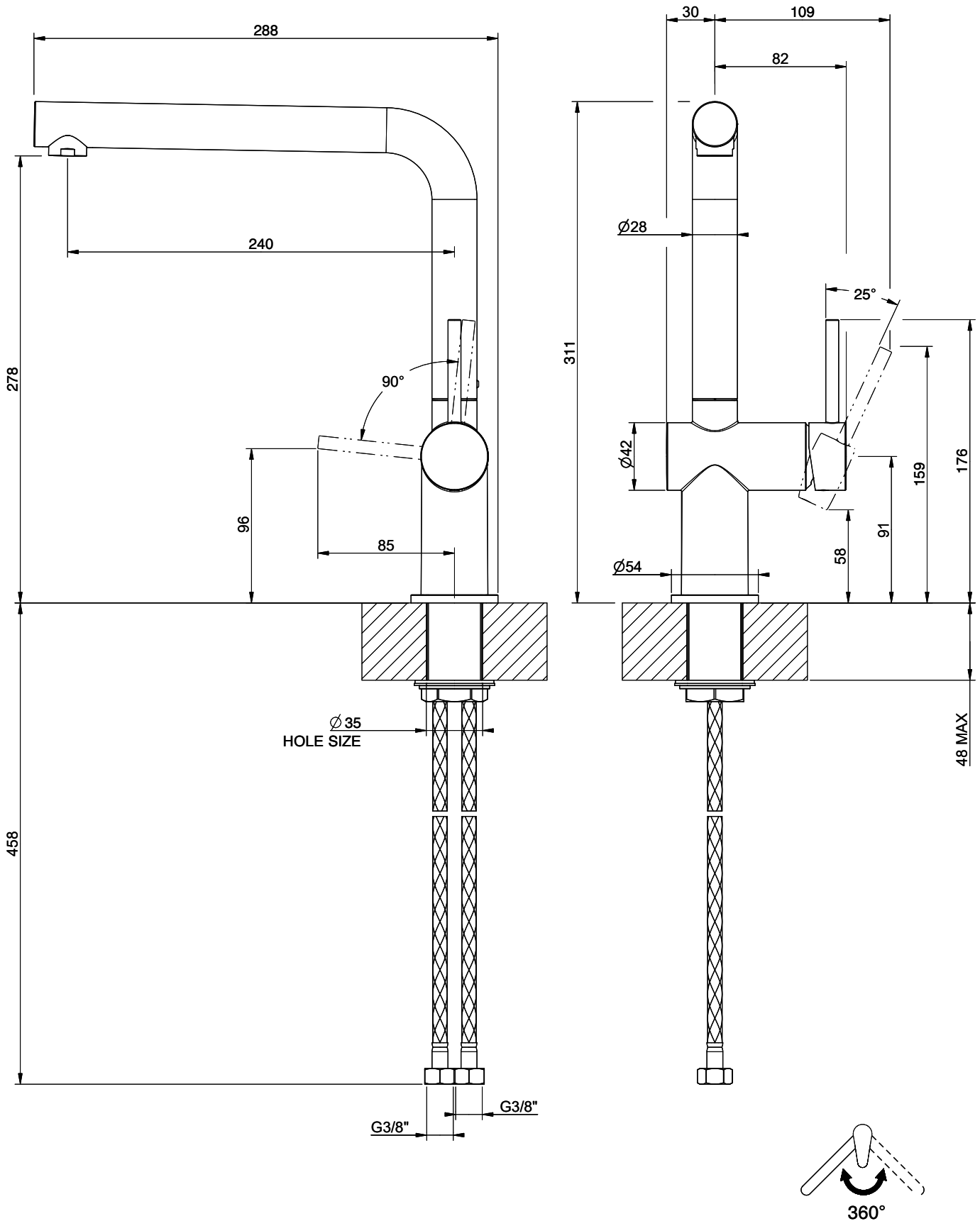

AMBIANO 60480

MISCELATORE LAVELLO MONOCOMANDO DA PIANO

Formato *A4*

Dis.: GPF6048000000A442

Gessi S.p.A.Parco Gessi,13037 Serravalle Sesia (Vercelli) Italy Tel.0039 0163 454111 Fax.0039 0163 453150 www.gessi.com e-mail:gessi@gessi.it

This drawing by its legislation cannot be disclosed or reproduced without a written authorization released by GESSI S.p.A. - 2025 Copyright© GESSI S.p.A.