Suter Arkano

> Web link



Serie
Suter Arkano

Version
Side Lever U

Article no.
40.003.073.00

Model
Pull out spout

Surface
Powder coating black matt

Price CHF
545.- excl. VAT

Product description

Label Swiss Energy

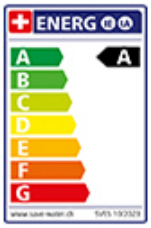

Pivoting Range
360°

Flow Rate
8.60 (l / min (3bar))

Water jet
Normal jet

Type of spout
Spout with nylon hose

Lever position
Right

Water connection
Flexible connecting hose

Extra
Ceramic cartridge

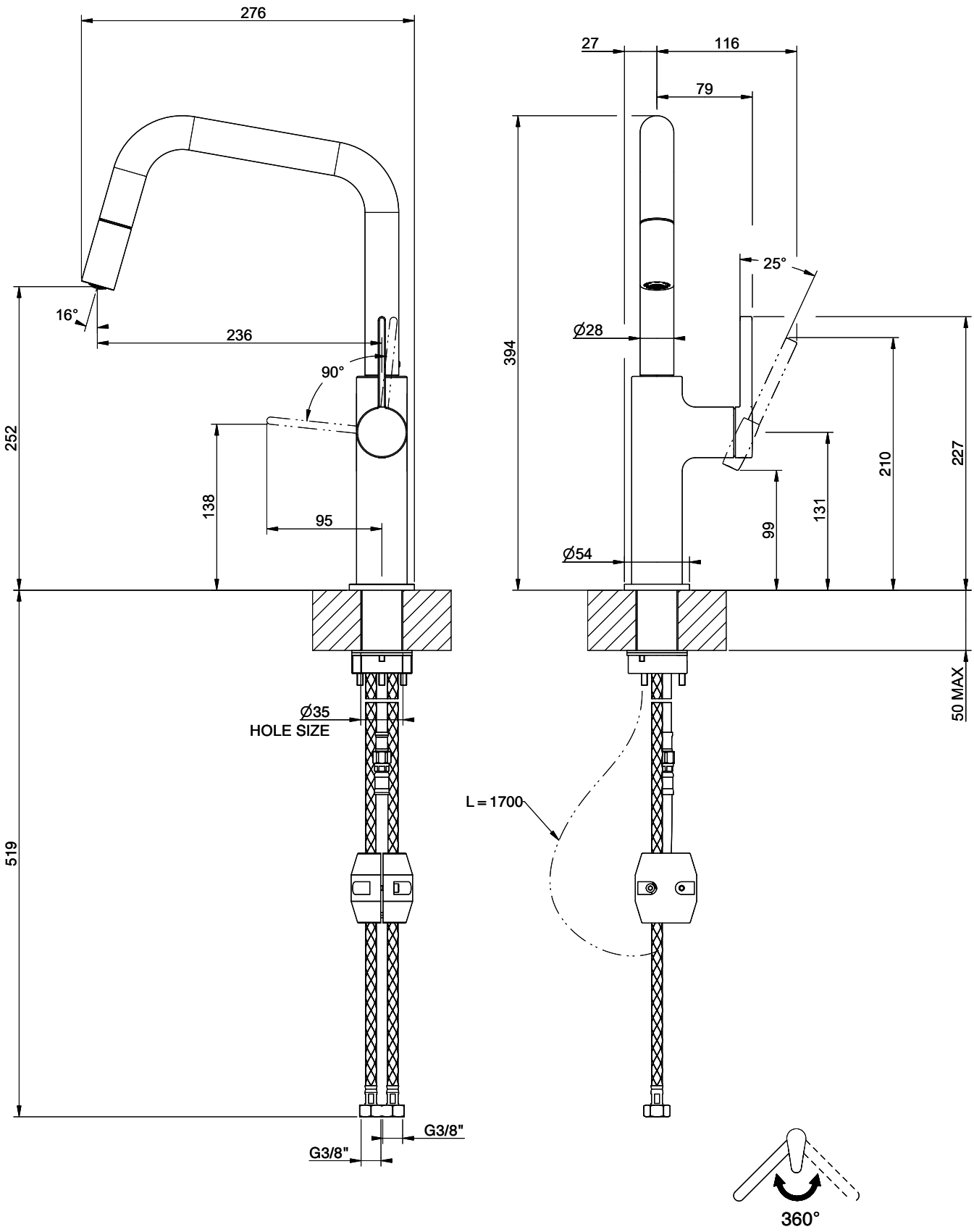

ARKANO 60563

MISCELATORE LAVELLO MONOCOMANDO DOCCINO ESTRAIBILE DA PIANO

Formato *A4*

Dis.: GPF6056300000A442

Gessi S.p.A.Parco Gessi,13037 Serravalle Sesia (Vercelli) Italy Tel.0039 0163 454111 Fax.0039 0163 453150 www.gessi.com e-mail:gessi@gessi.it

This drawing by its legislation cannot be disclosed or reproduced without a written authorization released by GESSI S.p.A. - 2025 Copyright© GESSI S.p.A.