Suter Raio

> Web link



Serie
Suter Raio

Article no.
40.003.063.00

Model
Professional spray

Surface
Chrome

Price CHF
685.- excl. VAT

Product description

Label Swiss Energy

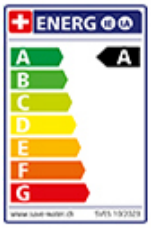

Pivoting Range
360°

Flow Rate
6.20 (l / min (3bar))

Water jet
Normal jet

Type of spout
Spout with metal hose

Lever position
Right

Water connection
Flexible connecting hose

Extra
Ceramic cartridge

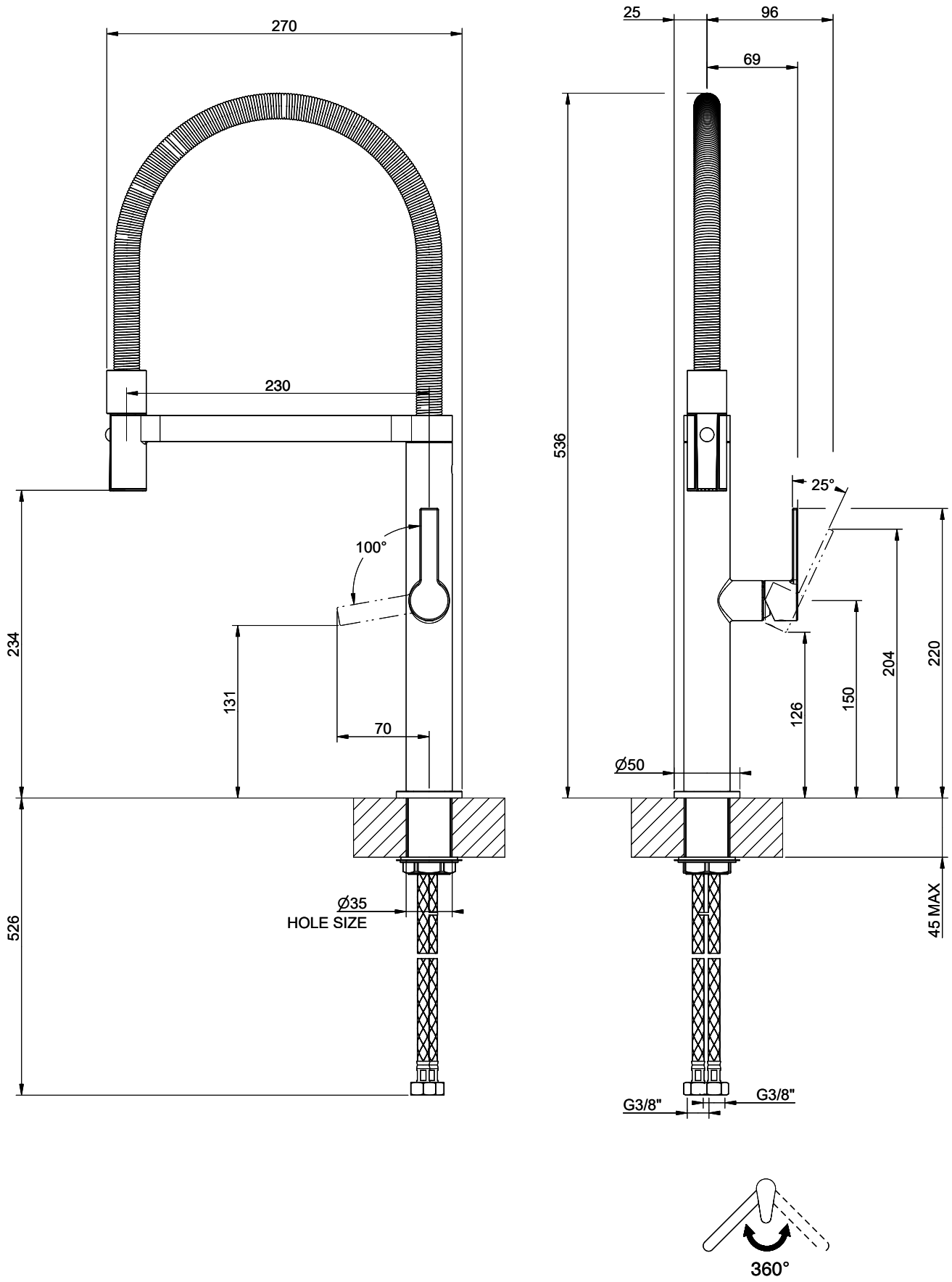

GESSI

RAIO 50010

MISCELATORE LAVELLO MONOCOMANDO SEMIPRO DA PIANO

Formato *A4*

Dis.: GPF5001000000A442

Gessi S.p.A.Parco Gessi,13037 Serravalle Sesia (Vercelli) Italy Tel.0039 0163 454111 Fax.0039 0163 453150 www.gessi.com e-mail:gessi@gessi.it

This drawing by its legislation cannot be disclosed or reproduced without a written authorization released by GESSI S.p.A. - 2025 Copyright© GESSI S.p.A.