Suter Vamos

> Web link



Serie
Suter Vamos

Article no.
40.003.090.00

Model
Swivel spout

Surface
Chrome

Price CHF
188.- excl. VAT

Product description

Label Swiss Energy

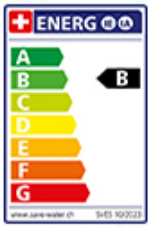

Pivoting Range
360°

Flow Rate
9.00 (l / min (3bar))

Water jet
Normal jet

Water connection
Flexible connecting hose

Extra
Ceramic cartridge

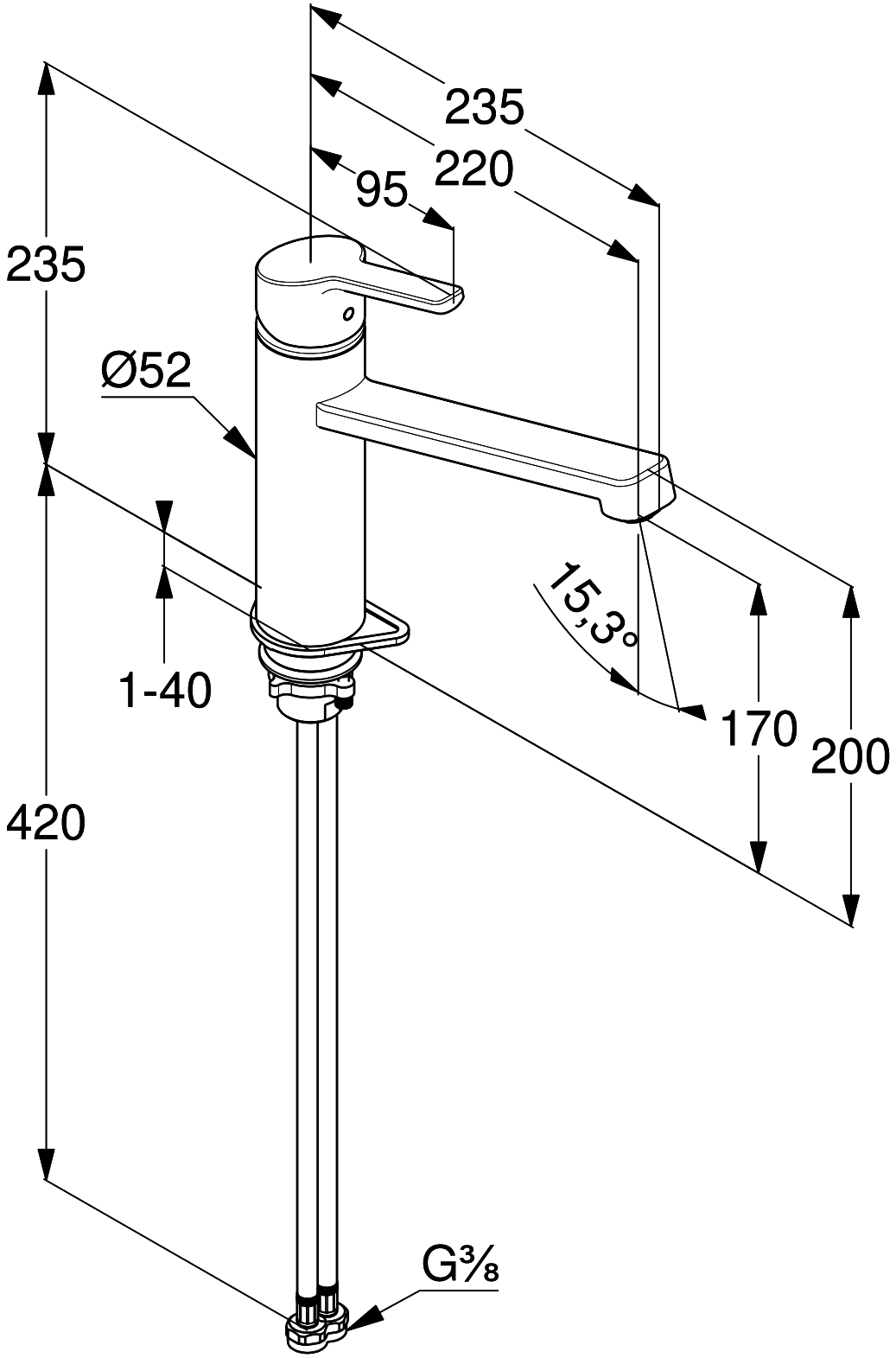
235
220
95
235
Ø52
1-40
15,3°
170
200
420
G⅜