Suter Zetrix

> Web link



Serie
Suter Zetrix

Article no.
40.002.938.00

Model
Swivel spout

Surface
Chrome

Price CHF
178.- excl. VAT

Product description

Label Swiss Energy

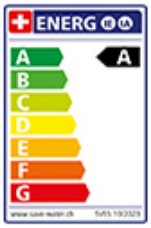

Pivoting Range
180°

Flow Rate
8.00 (l / min (3bar))

Water connection
Flexible connecting hose

Extra
Ceramic cartridge

Extra
Cold water: lever position in the middle

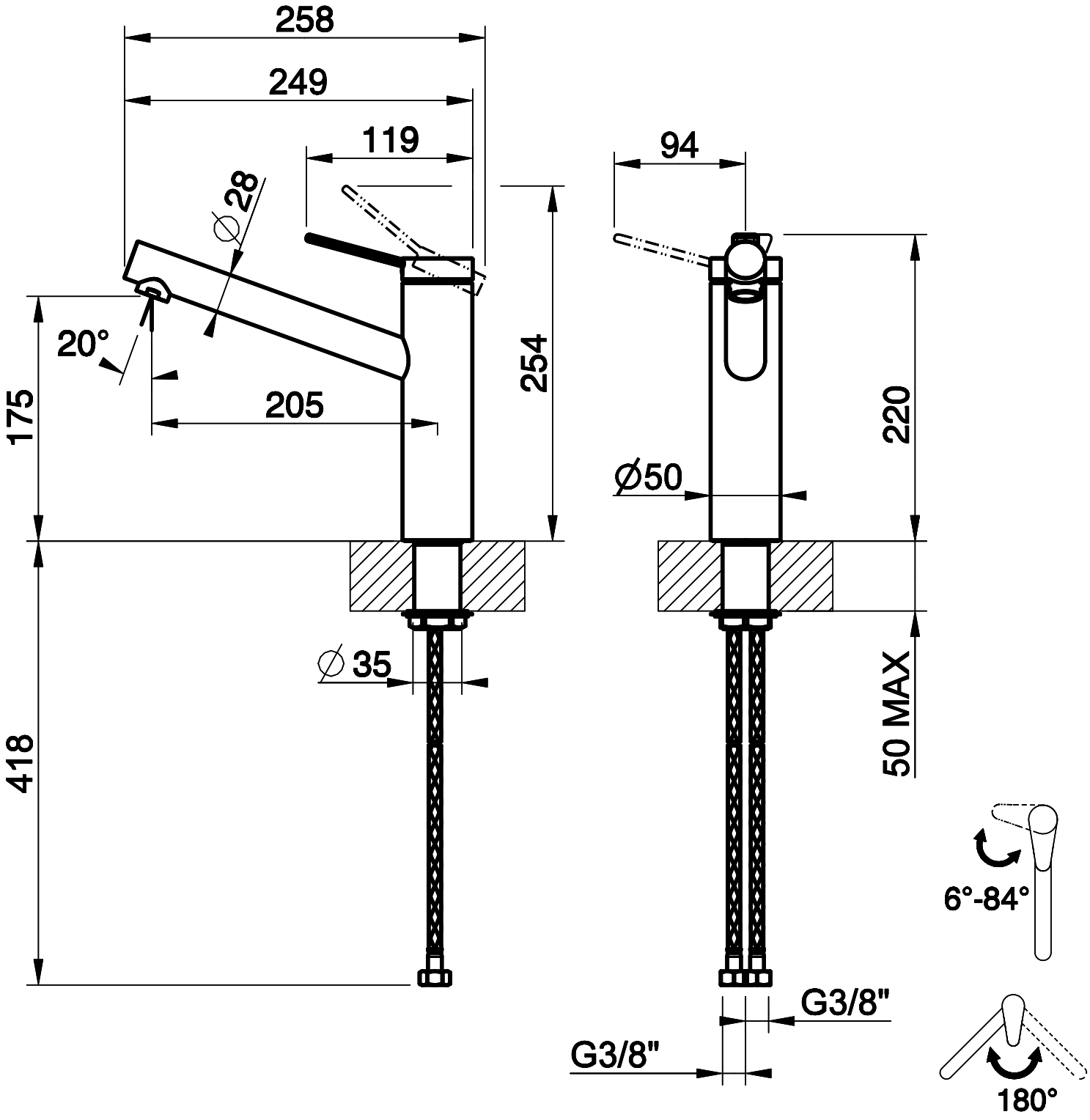

258
249
119
94
∅28
20°
175
205
254
220
∅50
∅35
418
50 MAX
6°-84°
G3/8"
G3/8"
180°