Suter Zetrix

> Web link



Serie
Suter Zetrix

Article no.
40.002.942.00

Model
Pull-out spray

Surface
stainless steel finish

Price CHF
298.- excl. VAT

Product description

Label Swiss Energy

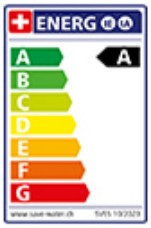

Pivoting Range
120°

Flow Rate
7.00 (l / min (3bar))

Type of spout
Spout with nylon hose

Water connection
Flexible connecting hose

Extra
Ceramic cartridge
Extra
Cold water: lever position in the middle

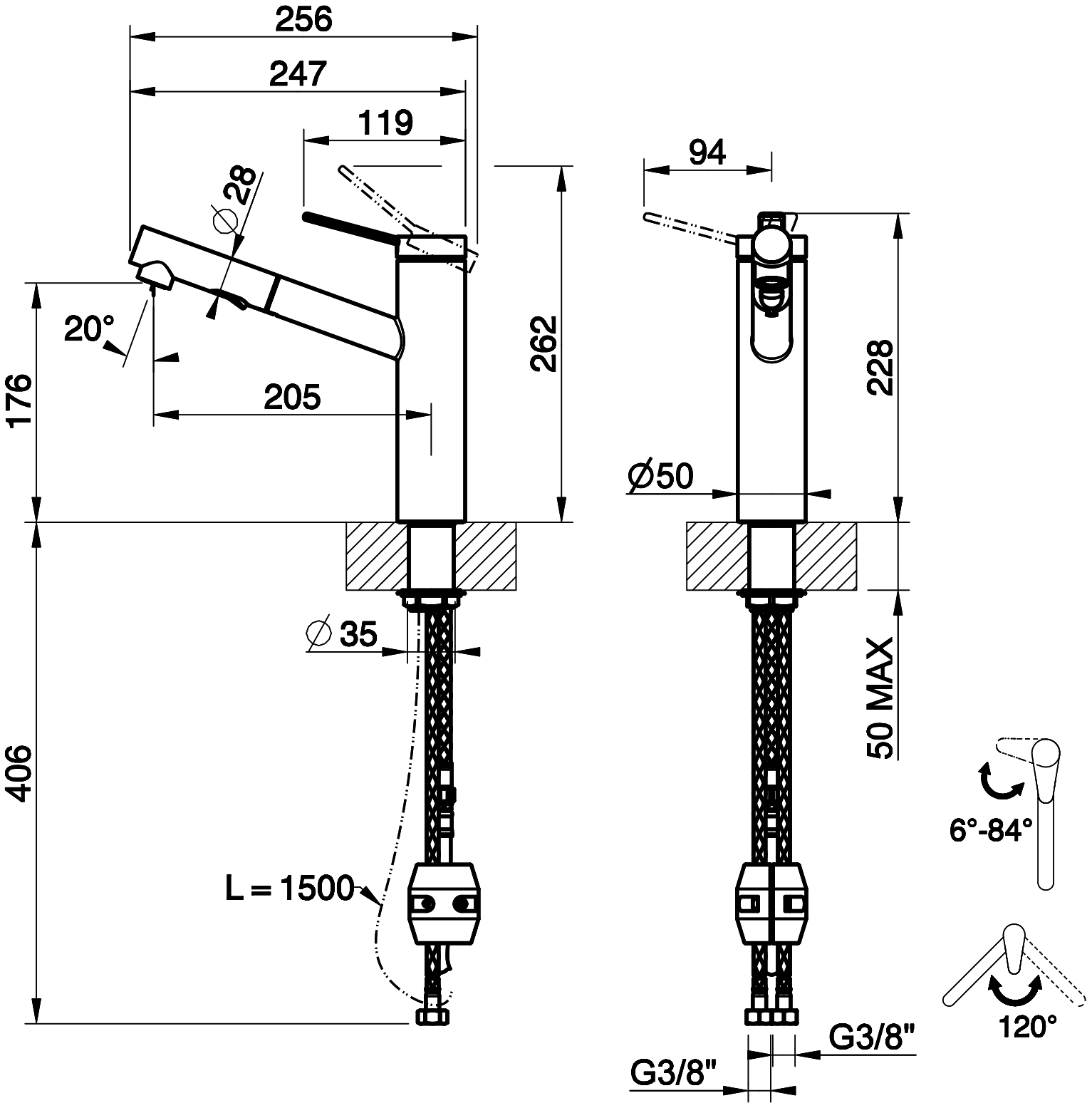
256
247
119
94
28
20°
176
205
262
228
406
Ø50
Ø 35
50 MAX
L = 1500
6°-84°
120°
G3/8"
G3/8"