Samsung Washing machine WM120

> Web link



Model
Samsung Washing machine WM120

Energy efficiency class
A (New Label 03.21)

Manufacturer ID
WW90T554AAW/S5

Article no.
500.000.121.00

Appliance type / construction type
Washing machine, front loader

Door hinge
Left

VRG
10.00

Price CHF
1628.- I excl. VAT

Highlights

- 20-year warranty on digital inverter motor
- Noise level: washing 53 db(A), centrifugation 72 db(A)
- Auto Cycle Link - compatible dryer suggests suitable programme after washing cycle
- Hygiene Steam - hygienic cleanliness with steam, eliminates allergens and bacteria
- AI Control (KI) - Intelligent washing
- Networking with Smart Things App
- AddWash™ - add laundry at any time
- ecobubble™- Deep cleaning at low temperatures, save energy
- Spin speed: max. 1400 rpm
- 15 min. quick wash
- 9 kg drum capacity

Product description

Appliance type / construction type: **Washing machine, front loader, Euro-Norm 60 cm**
GTIN no: **8806090604300**

Plannning guidelines
13 languages available, including Braille (English, Dutch, Danish, Finnish, French, German, Icelandic, Italian, Norwegian, Portuguese, Spanish, Swedish, Turkish)
Minimum clearance for proper operation: sides: 25 mm, top: 25 mm, rear: 50 mm, front: 550 mm

Consumption
Energy efficiency class (from A to G): **A**
Efficiency index: **51,9**
Energy consumption per 100 cycles: **49 kWh**
Water consumption per cycle: **50 L**
Power consumption in off-standby / timed standby / networked standby (if available): **0.5 / 5 / 2 W**

Design
Housing color: **White**
Door color: **Carved Black**

Display and operation
Indicator: **Control panel AI Control incl. Braille**
Display: **AI Control**
Operation:**Touch control & rotary knob**
Language display program selection (preset): **13 languages available, including Braille**

Interconnection of household appliances
Samsung Smart Home: **Smart Things App**

Performance properties
Washing performance class (from A to G): **A**
Spin-drying performance class (from A to G): **B**
Residual moisture: (full / half / quarter load): **53 / 51 / 53 %.**
Spin speed (revolutions per minute) (full / half / quarter load): **1400 / 1400 / 1400 rpm**
Washing efficiency index: **1.03**
Rinse efficiency: **5 g/kg**
Highest laundry temperature (full / half / quarter load): **31 / 27 / 21 °C**
Programme duration Eco 40-60°C (full / half / quarter load): **3:48 / 2:54 / 2:36 h**
Automatic switch-off time: **3 min**.
Sound power level
Washing: **53 dB(A)**
Spin: **72 dB(A)**
Airborne sound emission class during spinning (A to D): **A**

Mounting type
Freestanding with worktop:

Samsung Washing machine WM120

> Web link

Yes
Freestanding undercounter: **-**
Undercounter unit (without worktop): **-**
Mobile:**-**
Door hinge: **Left (not reversible)**

Dimensions
Unit dimensions (H x W x D): **850 x 600 x 635 mm**
Unit depth (incl. wall clearance) : **685 mm**
Unit depth with door open (incl. wall clearance): **1122 mm**
Adjustable height: **max. 30 mm**
Empty weight
Unit weight: **67 kg**

Fittings
QuickDrive™: **-**
AddWash™: **Yes**
ecobubble™ technology: **Yes**
Digital inverter motor: **Yes**
Anti-vibration technology: **-**
Ceramic heater rod: **-**
Drum type: **Diamant**
Drum volume: **61 L**
Drum lighting: **-**

Functions
SmartCheck: **-**
WiFi SmartControl: **Yes**
Smart Sensor (automatic capacity regulation) : **-**
AI Control: **Yes**
FleckenIntensiv [intensive stain removal]: **Yes**
Auto Optimal Wash -
Automatic dosing: -
Hygiene Steam: **Yes**
Speed Spray:**Yes**
Super Speed: **-**

Programme
Washing programs: **Cotton, Eco 40-60, Easy-care, Wool, Delicates, Baby Care Intensive, Super Quiet, Cloudy day, Coloured Washes, Towels, Shirts, Jeans, Cold Wash Intensive, Mixed Washes, Outdoor, Sportswear, Hygiene Steam, XXL Washes, Fast Wash 15', Pump + Spin, Rinse + Spin, Drum Cleaning+**
Options and keys on the display: **On / Off, navigation wheel, start/pause, display, OK, temperature, rinse, spin, additional functions, Smart Control**
Washing options: Prewash, Intensive
Indications on the display: **wash programme, load recommendation, temperature, rinse, Skidding, Smart Control, WLAN, door interlock, lock, programme remaining time, end time preselection, error messages**
Temperature selection: **Cold / 20 / 30 / 40 / 60 / 90 °C**
Spin speed: **0 / 400 / 800 / 1000 / 1200 / 1400 rpm**

Safety
Child safety: **Yes**
Anti-foam control: **Yes**
Overheating control: **Yes**
Self-diagnosis system: **Yes**
Self-cleaning filter: **Yes**
Aqua-stop hose: **Yes**
Leak sensor (tub): **Yes**

Power and water consumption
Electrical connection
Supply voltage: **230V**
Frequency: **50 Hz**
Connection values: **2,3 kW**
Fuse protection: **10 A**
Length power connection: **2 m**
Power plug: **with plug type 12, 10 A**
Water connection
Pressure hose G 3/4": **Yes**
Connectable to cold/hot water: **Yes / -**
Water pressure: **0,5 - 8 Bar**
Water inlet: **1,5 m with Aquastop**
Water outlet: **1,5 m**

Packaging
Weight, incl. Packaging: **69 kg**
Packaging dimensions (H x W x D): **890 x 670 x 660 mm**

Samsung Washing machine WM120

> Web link

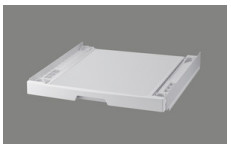
Accessory

Optional accessories



> Weblink

500.000.063.00 / CHF 42.-
Combination set SKK-DF washer/dryer tower SKK-DF WM120, WM130, WM40



> Weblink

500.000.129.00 / CHF 134.-
Combination set SKK-UDW washer/dryer tower with pull-out WM110, WM120

Compatible Articles



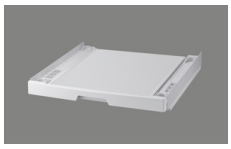
> Weblink

500.000.124.00 / CHF 1595.-
Dryer TR120 (left)



> Weblink

500.000.063.00 / CHF 42.-
Combination set SKK-DF washer/dryer tower SKK-DF WM120, WM130, WM40



> Weblink

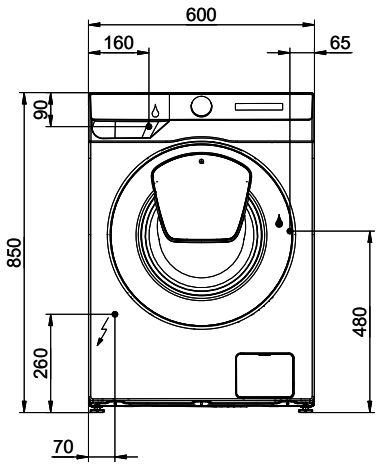
500.000.129.00 / CHF 134.-
Combination set SKK-UDW washer/dryer tower with pull-out WM110, WM120

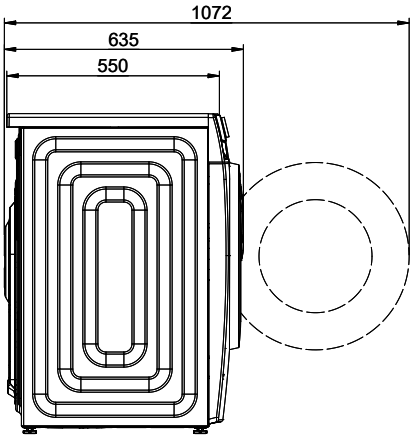
Suter Inox AG
Schachenstrasse 20
CH-5116 Schinznach-Bad
Tel. +41 56 463 63 33
Fax +41 56 463 63 30
E-Mail: suter@suter.ch

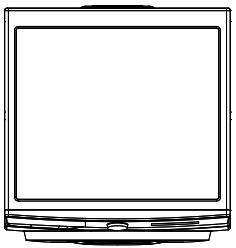
Samsung WM120

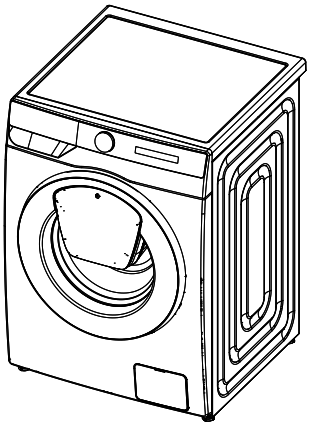
WW90T554AAW/S5

SUTER inox technik









230V 10A T12 - L=2000mm

Wasser Zulauf

Wasser Ablauf

Für diese Dokumente und alle abgebildeten Originalentwürfen sind wir alle Rechte wie Vervielfältigung, Übersetzung in fremde Sprachen, Verwendung in elektronischen Medien, Verbreitung durch Radio, Film, Fernsehen, Internet, Video, Tonträger und Fotokopie vorbehalten.

Art.Nr.:	500.000.121	Zeichn.Nr.:	50.02-20.0023.00.00	Index:	00	fes	18.10.2020